TECHNIKA®

Dishwasher

Instruction Manual

TDX8SS-2

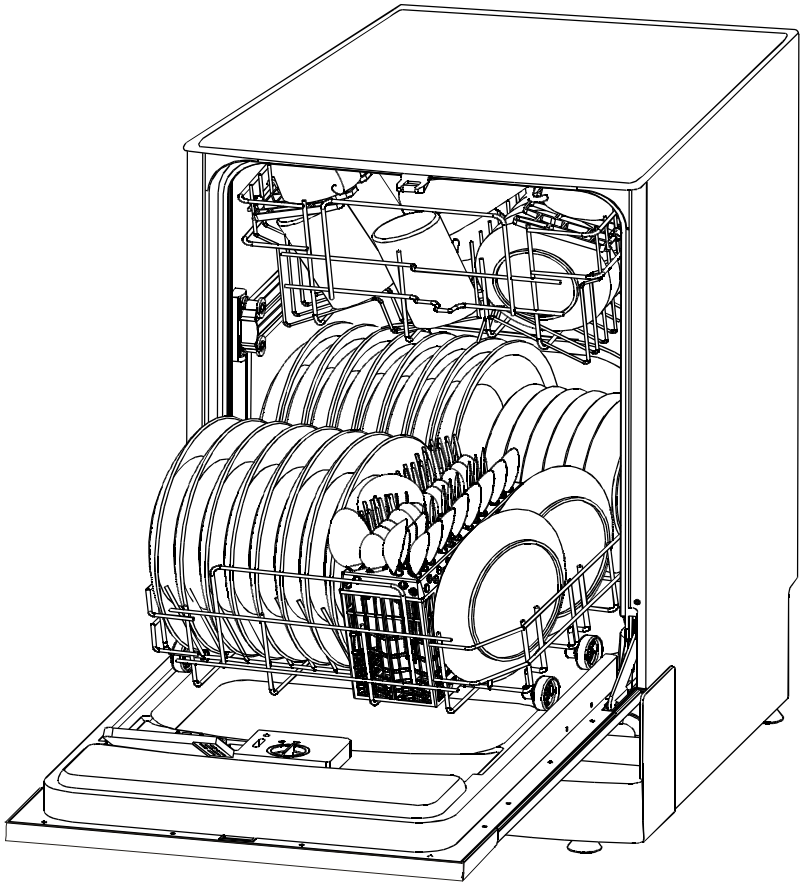

Read this Manual

Dear Customer,

- Please carefully read this manual before using the dishwasher, it will help you to use and maintain the dishwasher properly.
- Keep it to refer to it at a later date.
- Pass it on to any subsequent owner of the appliance.

This manual contains sections on safety Instructions, Operating Instructions, Installation Instructions and Troubleshooting Tips, etc.

This appliance is intended to be used in household and similar applications such as:
– staff kitchen areas in shops, offices and other working environments;
– farm houses;
– by clients in hotels, motels and other residential type environments;
– bed and breakfast type environments.



Before Calling for Service

- To review the section on troubleshooting Tips will help you to solve some common problems by yourself .
- If you can not solve the problems by yourself , please ask for the help of professional technicians.

NOTE:

The manufacturer, following a policy of constant development and updating of the product, may make modifications without giving prior notice.

1) Safety Information.....1

4) Operating Instructions.....2
Control Panel.....2
Dishwasher Features.....2

3) Prior using for the first time.....3
A、Fill the Rinse Aid Dispenser.....3
B、Function of Detergent 5

4) Loading the Dishwasher Basket.....7
Attention before or after loading the Dishwasher Baskets.....7
Loading the upper Basket.....7
Loading the Lower Basket.....9
Cutlery Basket.....10

5) Starting a washing programme.....11
Wash Cycle Table.....11
Turning on the Appliance.....12
Change the Programme.....12
At the End of the Wash Cycle.....12

6) Maintenance and cleaning.....13
Filtering System.....13
Caring for the Dishwasher.....14

7) Installation instruction.....15
Please carefully read the installation instruction 16
Aesthetic panel's dimensions and installation....16
Tension adjustment of the door spring.....18
Connection of drain hoses.....18
Dishwasher installation steps.....19
About Electricity Connecting.....20
Water Connection.....21

8) Troubleshooting Tips.....22
Before calling for service.....22
Error codes.....23
Technical information.....24

1.IMPORTANT SAFETY INFORMATION
READ ALL OF THE INSTRUCTIONS BEFORE USING

⚠ WARNING! When using your dishwasher, follow the precautions listed below:

GROUNDING INSTRUCTIONS

- This appliance must be grounded. In the event of a malfunction or breakdown, grounding will reduce the risk of anelectric shock by providing a path of least resistance of electric current. This appliance is equipped with a cord having an equipment–grounding conductor and a grounding plug.
- The plug must be plugged into an appropriate outlet that is installed and grounded in accordance with all local codes and ordinances.

⚠WARNING!

- Improper connection of the equipment–grounding conductor can result in the risk of an electric shock.
- Check with a qualified electrician or service representative if you are in doubt whether the appliance is properly grounded. Do not modify the plug provided with the appliance; If it does not fit the outlet. Have a proper outlet installed by a qualified electrician.

WARNING! PROPER USE

- Do not abuse, sit on, or stand on the door or dish rack of the dishwasher.
- Do not touch the heating element during or immediately after use.
  (This instruction is only applicable to machines with a visual heating element.)
- Do not operate your dishwasher unless all enclosure panels are properly in place. Open the door very carefully if the dishwasher is operating, there is a risk of water squirting out.
- Do not place any heavy objects on or stand on the door when it is open. The appliance could tip forward.
- When loading items to be washed:
  1) Locate sharp items so that they are not likely to damage the door seal;
  2) Warning: Knives and other utensils with sharp points must be loaded in the basket with their points down or placed in a horizontal position.
- When using your dishwasher, you should prevent plastic items from coming into contact with the heating element.(This instruction is only applicable to machines with a visual heating element.)
- Check that the detergent comparment is empty after completion of the wash cycle.
- Do not wash plastic items unless they are marked dishwasher safe or the equivalent. For plastic items not so marked, check the manufacturer's recommendations.
- Use only detergent and rinse additives designed for an automatic dishwasher.
- Never use soap, laundry detergent, or hand washing detergent in your dishwasher. Keep these products out of the reach of children.
- Keep children away from detergent and rinse aid, keep children away from the open door of the dishwasher, there could still be some detergent left inside.
- This appliance is not intended for use by persons (including children)with reduced physical, sensory or mental capabilities, or lack of experience and knowledge ,unless they have been given supervision or instruction concerning use of the appliance by a person responsible for their safety.
- Children should be supervised to ensure that they do not play with the appliance.
- Dishwasher detergents are strongly alkaline, they can be extremely dangerous if swallowed. Avoid contact with skin and eyes and keep children away from the dishwasher when the door is open.
- The door should not be left open, since this could increase the risk of tripping.
- If the supply cord is damaged, it must be replaced by the manufacturer or its service agent or a similarly qualified person in order to avoid a hazard.
- Remove the door to the washing compartment when removing an old dishwasher from service or discarding it.
- Please dispose of packing materials properly.
- Use the dishwasher only for its intended function.
- During installation, the power supply must not be excessively or dangerously bent or flattened. Do not tamper with controls.
- The appliance is to be connected to the water mains using new hose sets and that old hose–sets should not be reused.
- The maximum number of place settings to be washed is 12.
- The maximum permissible inlet water pressure is 1Mpa.
- The minimum permissible inlet water pressure is 0.04Mpa.

READ AND FOLLOW THIS SAFETY INFORMATION CAREFULLY
SAVE THESE INSTRUCTIONS

2.Operation Instruction

IMPORTANT! To get the best performance from your dishwasher, read all operating instructions before using it for the first time.

Control Panel

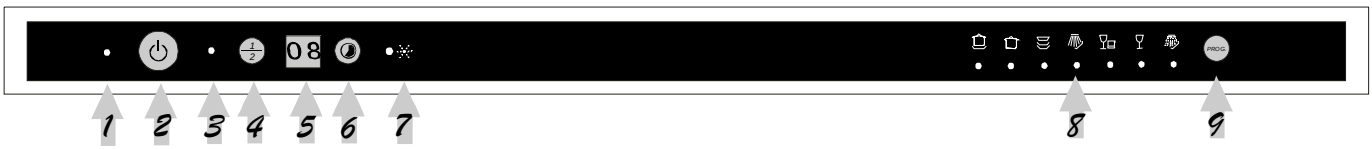

1 Power on light: To come on when Power ON/OFF button is pressed down.

2 ON/OFF Button: To turn on/off the power supply.

3 Half washing light: To come on when select the Half wash.

4 Half washing key–press:To select half washing. (Optional half washing means that the lower spray arm does not run, so you should load the upper basket only).

5 Delay time: To display booking time .

6 Delayed Start Button: Press this button to set the delayed hours for washing. You can delay the start of washing up to 24 hours. One press on this button delays the start of washing by one hour.

7 Rinse Aid Warning Light: To come on when the dispenser needs to be refilled.

8 Program indicator light: when you select washing program, the correspond light will display.

9 Program Key–press:To select washing program when press the Key–press.

Dishwasher Features

Front view

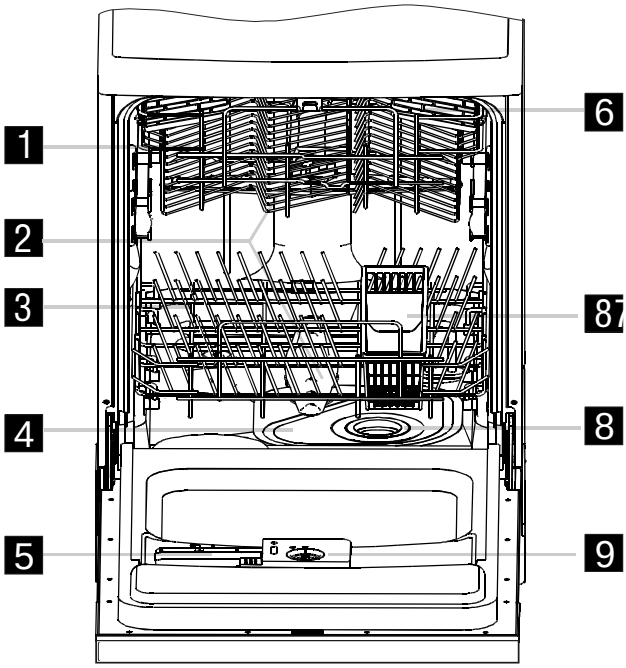

Back View

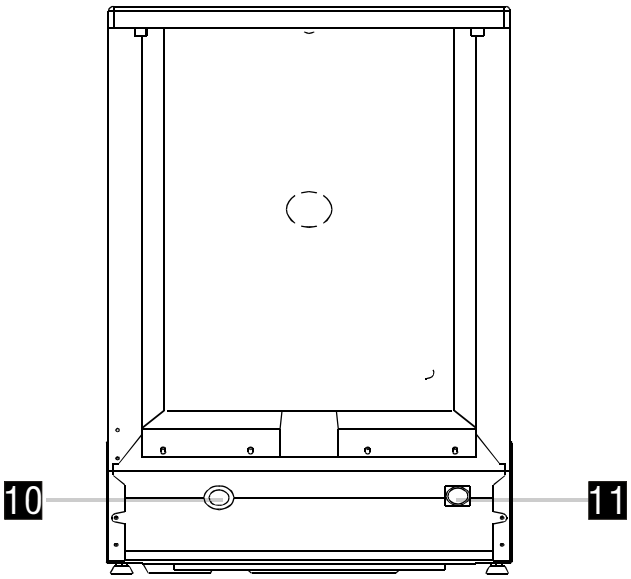

1 Upper Basket
2 Spray Arms
3 Lower Basket
4 Main Filter
5 Detergent Dispenser
6 Cup Shelf
7 Cutlery Basket
8 Coarse Filter
9 Rinse Aid Dispenser
10 Drain pipe connector
11 Inlet pipe connector

3.Prior using for the first time

Before using your dishwasher for the first time:

A. Fill the rinse aid dispenser

B. Fill in detergent

A. Fill the Rinse Aid Dispenser

Rinse Aid Dispenser

The rinse aid is released during the final rinse to prevent water from forming droplets on your dishes, which can leave spots and streaks. It also improves drying by allowing water to roll off the dishes. Your dishwasher is designed to use liquid rinse aids. The rinse aid dispenser is located inside the door next to the detergent dispenser. To fill the dispenser, open the cap and pour the rinse aid into the dispenser until the level indicator turns completely black. The volume of the rinse aid container is about 110ml.

Function of Rinse Aid

Rinse aid is automatically added during the last rinse, ensuring thorough rinsing, and spot and streak free drying.

Attention!

Only use branded rinse aid for dishwasher. Never fill the rinse aid dispenser with any other substances (e.g. Dishwasher cleaning agent, liquid detergent). This would damage the appliance.

When to Refill the Rinse Aid Dispenser

If there is no rinse–aid warning light in the control panel, you can judge the amount of rinse–aid by the color of the optical level indicator "C" located next to the cap. When the rinse–aid container is full, the whole indicator will be dark .As the rinse–aid diminishes, the size of the dark dot decreases. You should never let the rinse aid get below 1 / 4 full.

As the rinse aid diminishes, the size of the black dot on the rinse aid level indicator changes, as illustrated below.

- ● Full
- ◉ 3 / 4 full
- ◉ 1 / 2 full
- ⊙ 1 / 4 full – Should refill to eliminate spotting
- ○ Empty

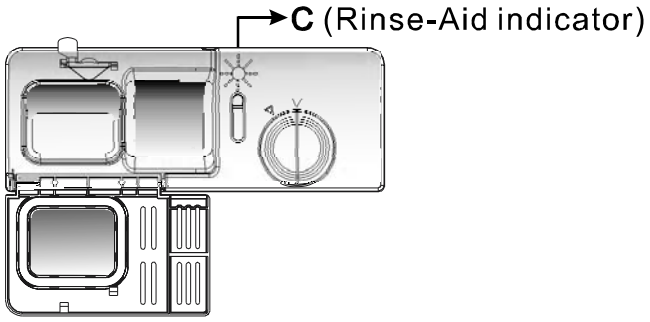

RINSE AID DISPENSER

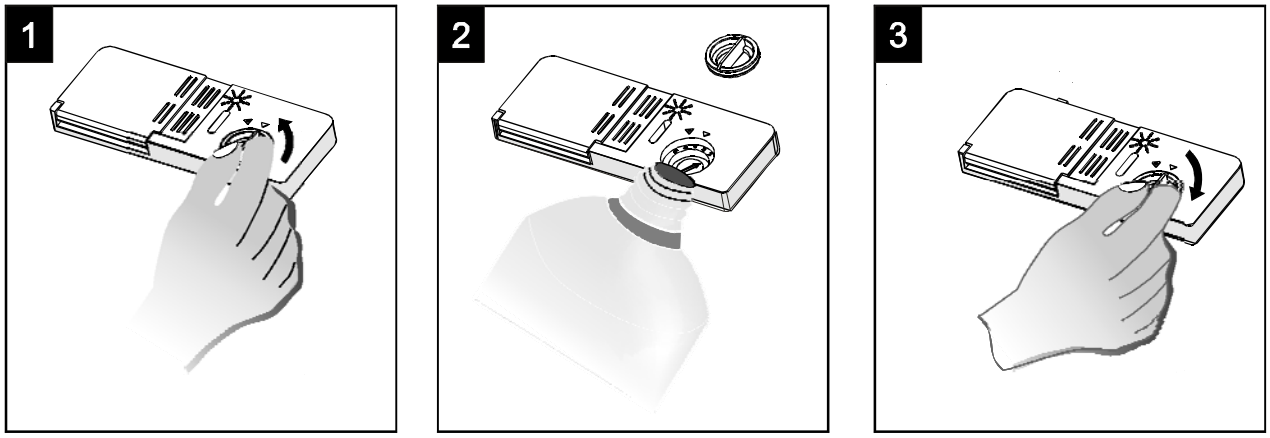

1 To open the dispenser, turn the cap to the "open" (left) arrow and lift it out.
2 Pour the rinse aid into the dispenser, being careful not to overfill.
3 Replace the cap by inserting it aligned with "open" arrow and turning it to the closed (right) arrow.

Be careful not to overfill the dispenser, because this could cause over sudsing. Wipe away any spills with a damp cloth. Don't forget to replace the cap before you close dishwasher door.

Attention!
Clean up any rinse aid split during filling with an absorbent cloth to avoid excess foaming during the next wash.

Adjusting Rinse Aid Dispenser

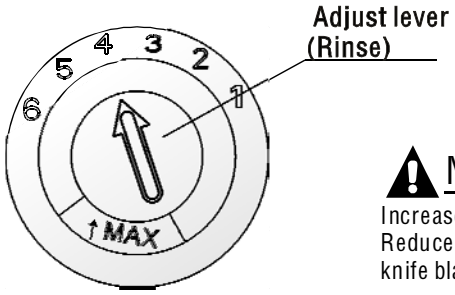

The rinse aid dispenser has six scales. Always start with the dispenser set on "4". If spots and poor drying are a problem, increase the amount of rinse aid dispensed by removing the dispenser lid and rotating the dial to "5". If the dishes still are not drying properly or are show spots, adjust the dial to the next higher lever until your dishes are spot–free. The recommended setting is "4". (Factory value is "4".)

NOTE:

Increase the dose if there are drops of water or lime spots on the dishes after washing. Reduce it if there are sticky whitish stains on your dishes or a bluish film on glassware or knife blades.

B. Function of Detergent

Detergents with its chemical ingredients are necessary to remove dirt, crush dirt and transport it out of the dishwasher.
Most of the commercial quality detergents are suitable for this purpose.

Concentrated Detergent

Based on their chemical composition, detergents can be split in two basic types:
- conventional, alkaline detergents with caustic components
- low alkaline concentrated detergents with natural enzymes

The use of "normal" washing programs in combination with concentrated detergents reduces pollution and is good for your dishes; these wash programs are specifically matched to the dirt–dissolving properties of the enzymes of the concentrated detergent. For this reason "normal" wash programs in which concentrated detergents are used can achieve the same results that can otherwise only be achieved using "intensive" programs.

Detergent Tablets

Detergent tablets of different brands dissolve at different speeds. For this reason some detergent tablets cannot dissolve and develop their full cleaning power during short programs. Therefore please use long programs when using detergent tablets, to ensure the complete removal of detergent residuals.

Detergent Dispenser

The dispenser must be refilled before the start of each wash cycle following the instructions provided in the wash cycle table . Your dishwasher uses less detergent and rinse aid than Conventional dishwasher. Generally, only one tablespoon of detergent is needed for a normal wash load. More heavily soiled items need more detergent. Always add the detergent just before starting the dishwasher, otherwise it could get damp and will not dissolve properly.

Amount of Detergent to Use

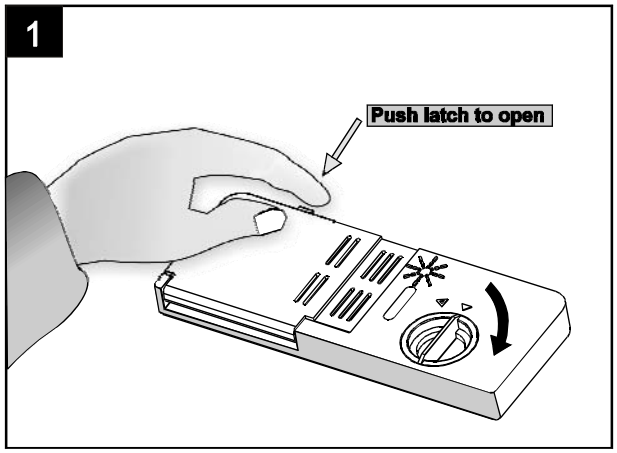

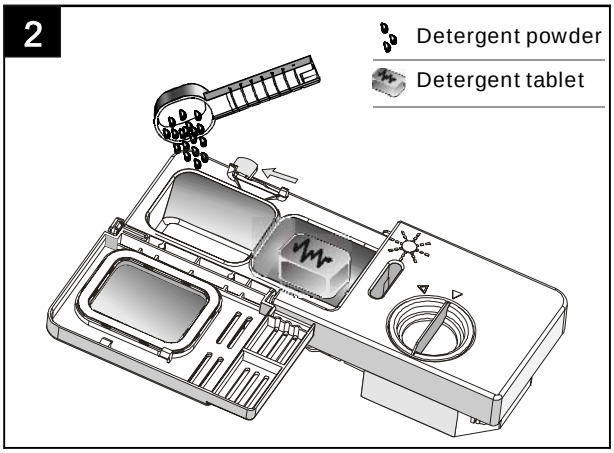

NOTE:

- If the lid is closed: press release button. The lid will spring open.
- Always add the detergent just before starting each wash cycle.
- Only use branded detergent aid for dishwasher.

WARNING! Dishwasher detergent is corrosive! Take care to keep it out of reach of children.

Proper Use of Detergent
Use only detergent specifically made for the use in dishwashers. Keep your detergent fresh and dry.
Don't put powdered detergent into the dispenser until you're ready to wash dishes.

Fill in detergent

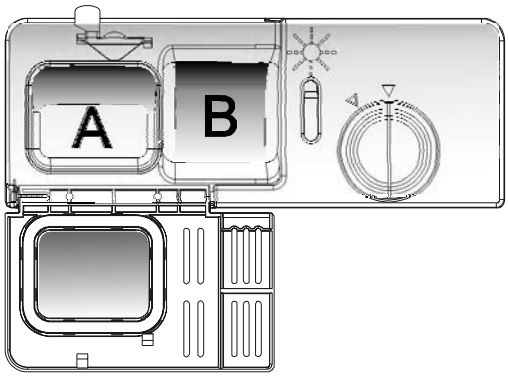

Fill the detergent dispenser with detergent.
The marking indicates the dosing levels , as illustrated on the right:

A The place of main wash cycle detergent placed , "MIN" means approximately 20g of detergent.

B The place of pre–wash cycle detergent placed , approximately 5g of detergent

Please observe the manufacturers dosing and storage recommendations as stated on the detergent packaging.

Close the lid and press until it locks in place.

If the dishes are heavily soiled, place an additional detergent dose in the pre–wash detergent chamber. This detergent will take effect during the pre–wash phase.

NOTE:

You find information about the amount of detergent for the single programmes on the last page. Please aware, that according to the level soiling and the specific hardness of water differences are possible.

Please observe the manufacturer's recommendations on the detergent packaging.

Detergents

There are 3 sorts of detergents

1.With phosphate and with chlorine
2.With phosphate and without chlorine
3.Without phosphate and without chlorine

Normally new pulverised detergent is without phosphate. Thus the water softener function of phosphate is not given. In this case we recommend to fill salt in the salt container even when the hardness of water is only 6 °dH. If detergents without phosphate are used in the case of hard water often white spots appear on dishes and glasses. In this case please add more detergent to reach better results. Detergents without chlorine do only bleach a little. Strong and coloured spots will not be removed completely. In this case please choose a program with a higher temperature.

Attention

Keep all detergents in a safe place out of children's reach.
Always add the detergent in the dispenser just before starting the dishwasher.

4.Loading the Dishwasher Basket

For best performance of the dishwasher, follow these loading guidelines. Features and appearance of baskets and cutlery baskets may vary from your model.

Attention before or after Loading the Dishwasher Baskets

Scrape off any large amounts of leftover food. Soften remnants of burnt food in pans.
It is not necessary to rinse the dishes under running water.
Place objects in the dishwasher in following way:
1.Items such as cups, glasses, pots/pans, etc. are faced downwards.
2.Curved items, or ones with recesses, should be loaded aslant so that water can run off.
3.All utensils are stacked securely and can not tip over.
4.All utensils are placed in the way that the spray arms can rotate freely during washing.

Very small items should not be washed in the dishwasher as they could easily fall out of the baskets.

Removing the Dishes

To prevent water dripping from the upper basket into the lower back, we recommend that you empty the lower basket first and then the upper basket.

Loading the Upper Basket

The upper basket is designed to hold more delicate and lighter dishware such as glasses, coffee and tea cup and saucers, as well as plates, small bowls and shallow pans (as long as they are not too dirty).
Position the dishes and cookware so that they do not get moved by the spray of water.

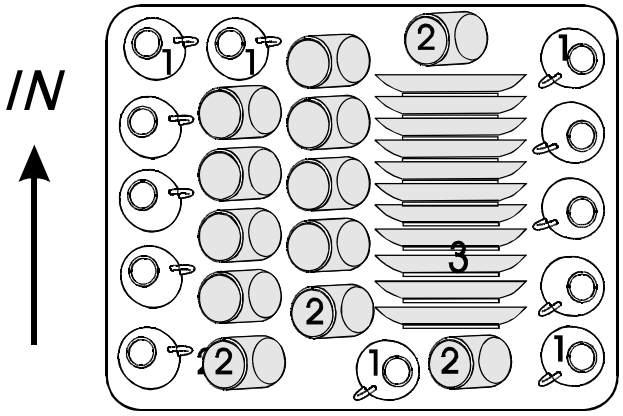



Saucers



Glasses

HOW TO USE THE UPPER RACK(12 PLACE SETTINGS)

The upper rack is for more delicate and lighter dishware such as glasses, coffee & tea cups, saucers, plates, bowls, and shallow pans (provided these are not too dirty).

Position the dishes and cookware so that they do not get moved by the spray of water. Always place glasses, cups & bowls upside down.

Note:

Your dishwasher comes with an adjustable top rack (basket) pictured at right. Its height can be adjusted by lifting the handle in a downward or upward direction. (pls see the figures on the right: position 1 & positong 2.)

Notice:

Ensure the metal rod is located in its correct position.



POSITION 1

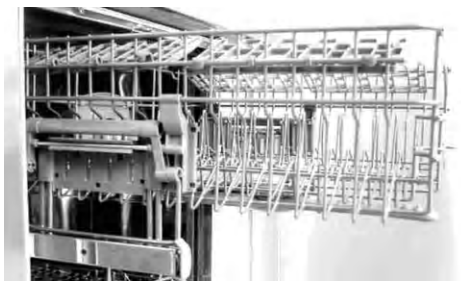

POSITION 2

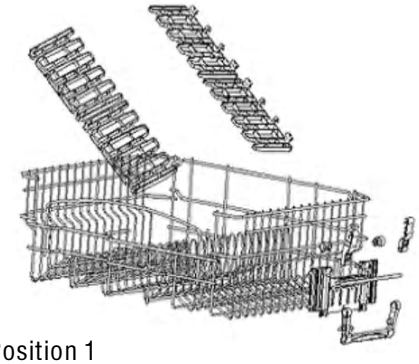

note: The upper rack has side flaps (pictured at left above basket). There are 4 (2 on each side). These can be adjusted into 2 positions = position 1 (high) and position 2 (low).

To move the flaps between these positions, locate the large hinges clip each flap to the upper rack. There are two of these at either end of each flap. Gently pull both clips off the wire rack and move the flap to the desired position. Be careful if you have long fingernails!

Position 1
The upper position will accommodate items such as glass tumblers (placed beneath flap) and wine glasses. Wine glasses can be placed upside down so that the neck rests in the grooves at side of flap with the base of the glass facing upward.

Position 2
When the flaps are moved to the lower position, they can be used to hold additional tumblers, cups and mugs. Always check that you are only placing items on the flaps that will clear the ceiling height of your dishwasher when you push the rack back in. Be particularly careful with long–stemmed glassware such as champagne glasses breakage hazard!

Loading the Lower Basket

We recommend that you place large items which are most difficult to clean into the lower basket: pots, pans, lids, serving dishes and bowls, as shown in the figure to the right.
It is preferable to place serving dishes and lids on the side of the racks in order to avoid blocking the rotation of the top spray arm.

Pots, serving bowls, etc. must always be placed top down.
Deep pots should be slanted to allow water to flow out.
The bottom basket feature fold down tine rows so that larger or more pots and pans can be loaded.

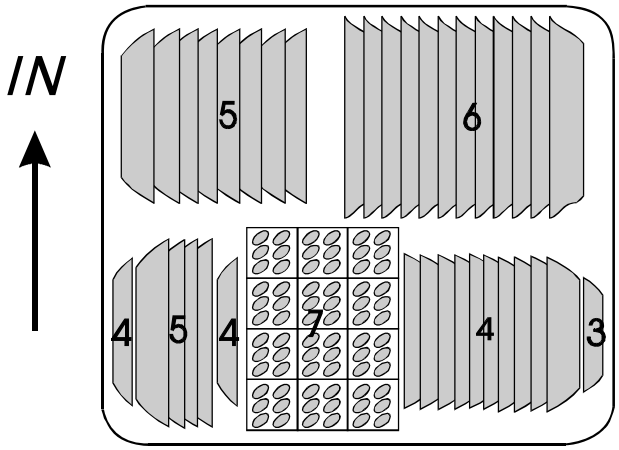

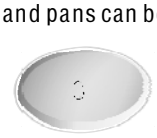
Saucers



Dessert dishes

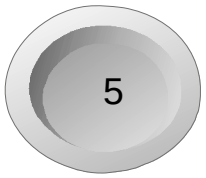

Soup plates



Dinner plates


7 Cutlery basket

Folding spikes

For better stacking of pots and pans, the spikes can be folded down as show in the picture right.

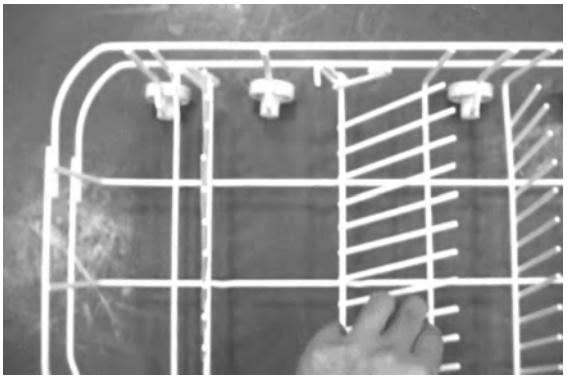

Cutlery Basket

Cutlery should be placed in the cutlery basket with the handles at the bottom. If the rack has side baskets, the spoons should be loaded separately into the appropriate slots, especially long utensils should be placed in the horizontal position at the front of the upper basket as shown in the picture.

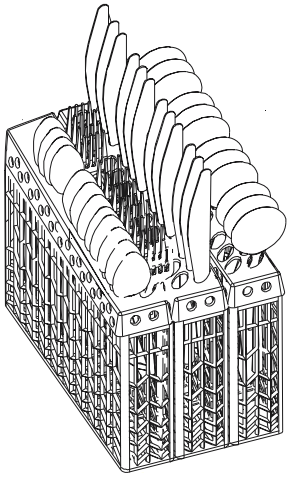

IN

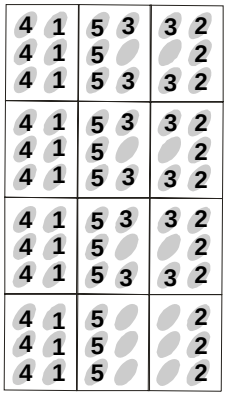

1	Forks	
2	Soup spoons	
3	Dessert spoons	
4	Teaspoons	
5	Knives	



⚠ *WARNING!*

- Do not let any item extend through the bottom.
- Always load sharp utensils with the sharp point down!

For washing in the dishwasher the following cutlery/dishes

Are not suitable

Cutlery with wooden, horn china or mother–of–pearl handles
Plastic items that are not heat resistant
Older cutlery with glued parts that are not temperature resistant
Bonded cutlery items or dishes
Pewter or cooper items
Crystal glass
Steel items subject to rusting
Wooden platters
Items made from synthetic fibres

Are of limited suitability

Some types of glasses can become dull after a large number of washes

Silver and aluminum parts have a tendency to discolour during washing

Glazed patterns may fade if machine washed frequently

NOTE:

Do not put in items that are dirty of cigarette ash, candle wax, lacquer or paint.
If you buy new dishes please make sure that they are suitable for dishwashers.

NOTE:

Please do not overload your dishwasher. Do not use dish that is not suitable for dishwashers. This is important for good results and for reasonable energy consume.

Loading cutlery and dishes

Before loading the dishes, you should:
Remove large left–over
Soften remnants of burnt food in pans

When loading the dishes and cutlery, please note:

Dishes and cutlery must not impede the rotation of the spray arms
Load hollow items such as cups, glasses, pans etc. with the opening downwards so that water cannot collect in the container or a deep base

Dishes and items of cutlery must not lie inside one another, or cover each other

- To avoid damage to glasses, they must not touch
- Load large items which are most difficult to clean into the lower rack
- The upper rack is designed to hold more delicate and lighter dishware such as glasses, coffee and tea cups

Attention!

Long bladed knives stored in an upright position are a potential hazard!
Long and/or sharp items of cutlery such as carving knives must be positioned horizontally in the upper basket.

Damage to glassware and other dishes

Possible causes:

- Type of glass or manufacturing process. Chemical composition of detergent.
- Water temperature and duration of dishwasher programme.

Suggested remedy:

- Use glassware or porcelain dishes that have been marked dishwasher–proof by the manufacturer
- Use a mild detergent that is described as kind of dishes If necessary, seek further information from detergent manufacturers.
- Select a programme with as low a temperature.
- To prevent damage, take glass and cutlery out of the dishwasher as soon as possible after the programme has ended.

5.Starting a washing programme

WASH CYCLE TABLE

Program Cycle	Cycle Selection Information	Description of Cycle	Detergent pre/main	Running time(min)	Energy (Kwh)	Water (l)	Rinse Aid
Intensive 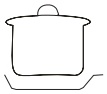	For heaviest soiled crockery, and normally soiled pots、pans、dishes etc with dried on soiling;	Pre-wash(45℃) wash(50℃/65℃) Rinse Rinse (65℃) Drying	5/25 g.	168	1.55	17.5	★
Heavy 	For heavily soiled loads, such as pots, plates, glasses and lightly soiled pans.	Pre-wash Pre-wash Pre-wash Wash (50℃) Rinse Rinse (70℃) Drying.	5/25 g.	165	1.25	17	★
Normal  (AS/NZS 2007.1)	Standard daily cycle for normally soiled loads, such as pots、plates、glasses.	Wash(55℃) Rinse Rinse Rinse (50℃) Drying.	5/25 g.	115	0.82	12	★
Rinse 	For dishes that need to be rinsed and dried only.	Pre-wash Rinse (70℃) Drying.		76	0.80	7.5	★
Glass 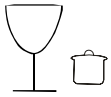	For lightly soiled crockery and glass	Pre-wash Wash (40℃) Rinse (60℃) Drying.	20 g.	115	0.95	13	★
Rapid 	A shorter wash for lightly soiled loads and quick wash	Wash (40℃) Rinse Rinse(50℃)	20 g.	50	0.60	10	
Soak 	To rinse dishes that you plan to wash later that day	Pre-wash		8	0.01	3.5	

NOTE:

- (★) *Meaning: need to fill rinse into the Rinse-Aid Dispenser.*
- **AS/NZS 2007.1: This programme is the test cycle. The information for comparability test in accordance with AS/NZS 2007.1 , as follows:*
  - Capacity: 12 setting
  - Position Upper basket: upper wheels on rails
  - Rinse aid setting: 6

NOTE: *We recommend you open the door slightly 50mm to assist in drying of the dishes after every wash.*

Turning on the Appliance

Starting a wash cycle...

1 Draw out the lower and upper basket, load the dishes and push them back. It is commended that loading the lower basket first, than the upper one (see the section entitled "Loading the Dishwasher").

2 Pour in the detergent (see the section entitled "Detergent And Rinse Aid").

3 Insert the plug into the socket. The power supply is 220–240 VAC 50 HZ, the specification of the socket is 10 A 250 VAC. Make sure that the water supply is turned on to full pressure.

4 Open the door, press the ON/OFF button, and the ON/OFF light will turn on.

Press the "prog. "Button to select a desired "Wash cycle".(see the section entitled."Wash Cycle Table".)

5 With a little force to ensure the door is properly closed.

NOTE: A click could be heard when the door is closed perfectly.

6 When the washing is over, you can shut off the switch by pressing ON/OFF button.

Change the Programme

Premise: A cycle that is underway can only be modified if it has only been running for a short time. Otherwise, the detergent may have already been released, and the appliance may have already drained the wash water. If this is the case, the detergent dispenser must be refilled (see the section entitled " Loading the Detergent ").

Open the door,Press current prog. Button more than three seconds to cancel the program ,then you can change the program to the desired cycle setting (see the section entitled " Starting a wash cycle. . . "). Then, close the door.

NOTE: If you open the door when washing, the machine will pause. When you close the door , the machine will keep on working after 10 seconds.

Theprogram lights shows the state of the dishwasher:

a) All program lights off --> stand by

b) One of the program lights on --> pause

c) One of the program lights blinking --> run

NOTE:

If the dishwasher shows error code after it sounds for 30 seconds, that indicates the machine is out of order, please turn off themain power and water supply before calling a service.

Forget to Add a Dish?

A forgotten dish can be added at any time before the detergent cup opens.

1 Open the door a little to stop the washing.

2 After the spray arms stop working, you can open the door completely.

3 Load the forgotten dishes.

4 Close the door, the dishwasher will start running again after 10 seconds.

⚠ *WARNING!*

It is dangerous to open the door when washing,because the hot water may scald you.

At the End of the Wash Cycle

When the working cycle has finished, the buzzer of the dishwasher will sound for 8 seconds, then stop. Turn off the appliance using the ON/OFF button, shut off the water supply and open the door of the dishwasher.
Wait for a few minutes before unloading the dishwasher to avoid handling the dishes and utensils while they are still hot and more susceptible to breakage. They will also dry better.

■ Switch Off the Dishwasher

The buzzer of the dishwasher moos for 8 seconds, only in this case the programme has ended.
1.Switch off the dishwasher by pressing the ON/OFF button.
2.Turn off the water tap!

■ Open the door carefully.

Hot dishes are sensitive to knocks. The dishes should therefore be allowed to cool down around 15 minutes before removing from the appliance.
Open the dishwasher's door, leave it ajar and wait a few minutes before removing the dishes. In this way they will be cooler and the drying will be improved.

■ Unloading the dishwasher

It is normal that the dishwasher is wet inside.
Empty the lower basket first and then the upper one. This will avoid water dripping from the upper Basket onto the dishes in the lower one.

6.Maintenance and Cleaning

Filtering System

The filter prevents larger remnants of food or other objects from getting inside the pump.
The residues may block the filter, in this case they must be removed.

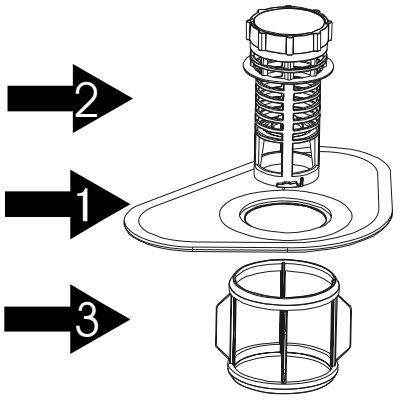

The filter system consists of a coarse filter, a flat (Main filter) And a microfilter (Fine filter).

Main filter 1

Food and soil particles trapped in this filter are pulverized by a special jet on the lower spray arm and washed down the drain.

Coarse filter 2

Larger items, such as pieces of bones or glass, that could clog the drain are trapped in the coarse filter. To remove an item caught in this filter, gently squeeze the taps on the top of this filter and lift it out.

Fine filter 3

This filter holds soil and food residues in the sump area and prevents it from being redeposit on the dishes during a cycle.

– Inspect the filters for blocking after every time the dishwasher has been used.
– By unscrewing the coarse filter. you can remove the filter system. Remove any food remnants and clean the filters under running water.

1

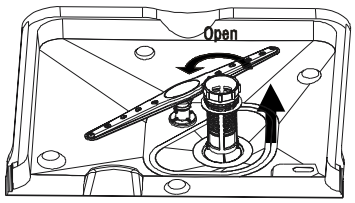

step 1 : Turn the filter in anti-clockwise direction, then lift it up

2

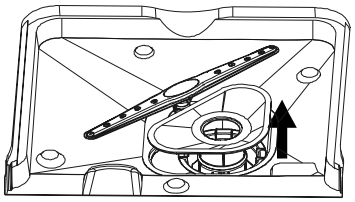

step 2 : lift the Main filter up

3

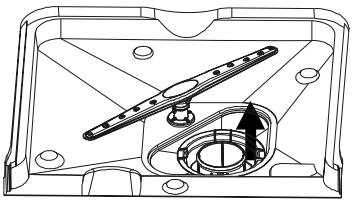

step 3: lift the Fine filter up

NOTE: When following this procedure from step1 to step 3, the filter system will be removed; when following it from Step 3 to Step 1, the filter system will be installed.

Filter assembly

For best performance and results, the filter assembly must be cleaned. The filter efficiently removes food particles from the wash water, allowing it to be recycled during the cycle. For best performance and results, the filter must be cleaned regularly. For this reason, it is a good idea to remove the larger food particles trapped in the filter after each wash cycle by rinsing the semicircular filter and cup under running water.
To remove the filter device, pull the cup handle in the upward direction. The entire filter assembly should be cleaned once a week.

To clean the coarse filter and the fine filter, use a cleaning brush. Then, reassemble the filter parts as shown in the figures left and reinsert the entire assembly in the dishwasher, positioning in its seat and pressing downward.
The dishwasher must never be used without the filters. Improper replacement of the filter may reduce the performance level of the appliance and damage dishes and utensils.

⚠ *WARNING!*

- The dishwasher must never be used without the filters.
- Improper replacement of the filter may reduce the performance level of the appliance and damage dishes and utensils.

Cleaning the Spray Arms

It is necessary to clean the spray arms regularly for hard water chemicals will clog the spray arm jets and bearings.

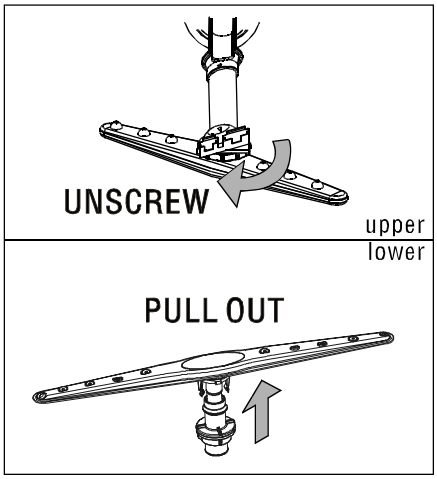

Remove the upper spray arm

To remove the upper spray arm, screw off the nut clockwise then remove the arm.

Remove the lower spray arm

To remove the lower spray arm, pull out the spray arm upward.

Wash the arms

Wash the arms in soapy and warm water and use a soft brush to clean the jets. Replace them after rinsing them thoroughly.

Caring for the Dishwasher

The control panel can be cleaned by using a lightly dampened cloth.
After cleaning, make sure to dry it thoroughly.

For the exterior, use a good appliance polish wax.
Never use sharp objects, scouring pads or harsh cleaners on any part of the dishwasher.

Protect Against Freezing

please take frost protection measures on the dishwasher in winter. Every time after washing cycles, please operate as follows:

1.Cut off the electrical power to the dishwasher.
2.Turn off the water supply and disconnect the water inlet pipe from the water valve.
3.Drain the water from the inlet pipe and water valve. (Use a pan to catch the water)
4.Reconnect the water inlet pipe to the water valve.
5.Remove the filter at the bottom of the tub and use a sponge to soak up water in the sump.

Cleaning the Door

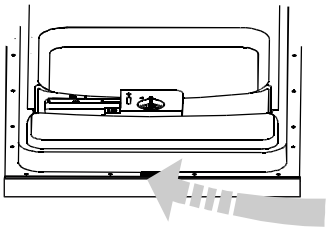

To clean the edge around the door, you should use only a soft warm, damp cloth. To avoid penetration of water into the door lock and electrical components, do not use a spray cleaner of any kind.

⚠ WARNING!

- Never use a spray cleaner to clean the door panel as it may damage the door lock and electrical components.
- Abrasive agents or some paper towels should not be used because of the risk of scratching or leaving spots on the stainless steel surface.

How to Keep Your Dishwasher in Shape

After Every Wash

After every wash, turn off the water supply to the appliance and leave the door slightly ajar so that moisture and odours are not trapped inside.

Remove the Plug

Before cleaning or performing maintenance, always remove the plug from the socket. Do not run risks.

No Solvents or Abrasive Cleaning

To clean the exterior and rubber parts of the dishwasher, do not use solvents or abrasive cleaning products. Spray on surface cleaners should also be avoided, The use of these cleaning products could result in the surface being damaged and the development of rust and corrosion. Rather, use only a cloth and warm soapy water.
To remove spots or stains from the surface of the interior, use a cloth dampened with water and a little vinegar, or a cleaning product made specifically for dishwashers.

When not in Use for a Long Time

When you go on holiday, it is recommend that you run a wash cycle with the dishwasher empty and then remove the plug from the socket, turn off the water supply and leave the door of the appliance slightly ajar. This will help the seals to last longer and prevent odours from forming within the appliance.

Moving the Appliance

If the appliance must be moved, try to keep it in the vertical position. If absolutely necessary, it can be positioned on its back.

Seals

One of the factors that cause odours to form in the dishwasher is food that remains trapped in the seals. Periodic cleaning with a damp sponge will prevent this from occurring.

7.Installation instruction

⚠ Attention:

The installation of the pipes
and electrical equipments
should be done by professionals.

⚠ Warning

Electrical Shock Hazard
Disconnect electrical power before installing dishwasher.

Failure to do so can result in death or electrical shock.

● Installation preparation

The installation position of dishwasher should be near the existing inlet and drain hoses and power cord.

One side of the cabinet sink should be chosen to facilitate the connection of drain hoses of the dishwasher.

Note: please check the accompanying installation accessories(hook for aesthetic panel ,screw)

【Figure1】

Cabinet dimensions
Less than 5mm between the top of dishwasher and cabinet and the outer door aligned to cabinet.

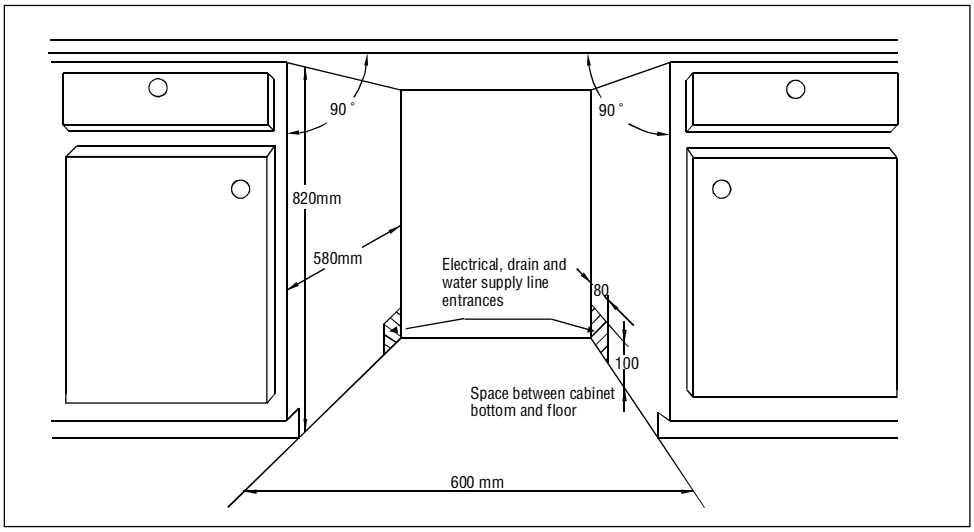

【Figure2】

Minimum space when the door is opened

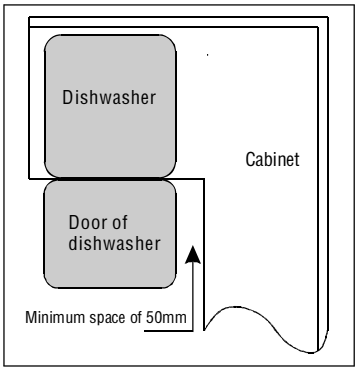

● Aesthetic panel's dimensions and installation

1 The aesthetic wooden panel could be processed according to the Figure 3.

【Figure3】

The aesthetic panel should be processed in accordance with the illustrated dimensions

(Unit: mm)

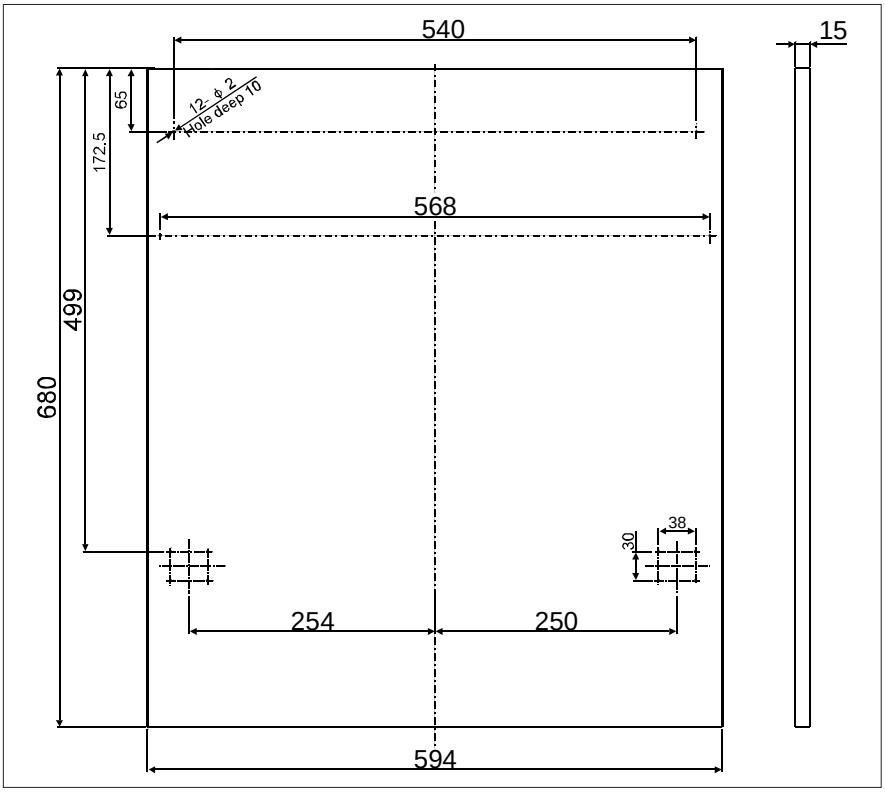

2 Install the hook on the aesthetic wooden panel and put the hook into the slot of the outer door of dishwasher(see figure 4a). After positioning of the panel , fix the panel onto the outer door by screws and bolts(See figure 4b) .

【Figure4a】

Installation of aesthetic panel

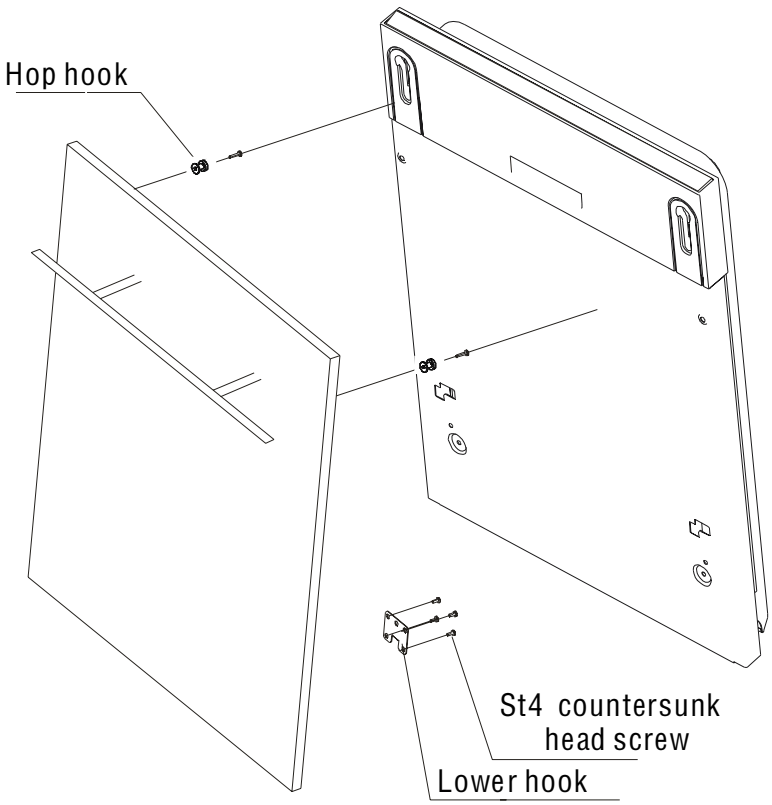

【Figure4b】

Installation of aesthetic wooden panel

1. take away the cover
2. pin up the screw
3. get back the cover

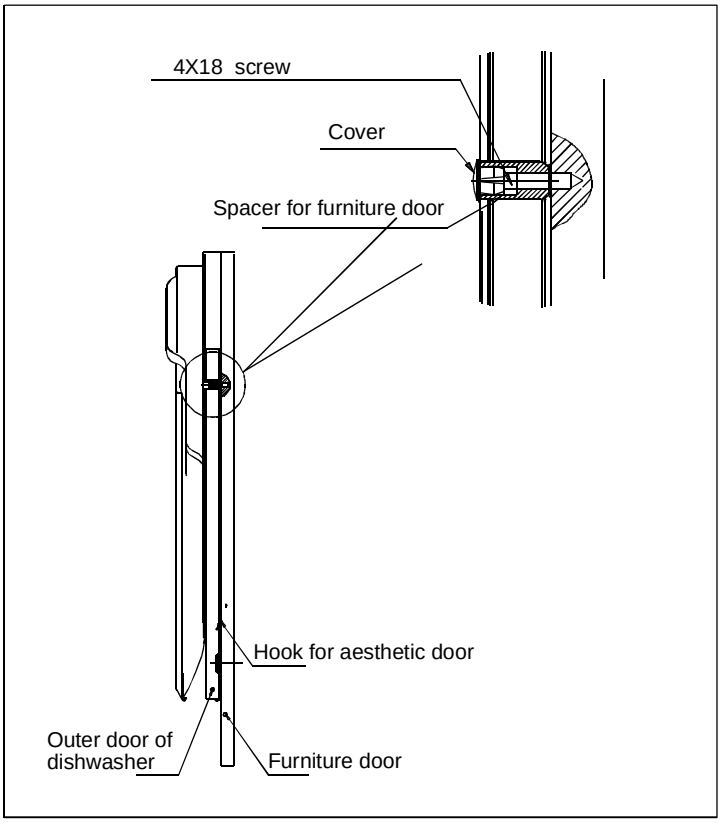

● Tension adjustment of the door spring

The door springs are set at the factory to the proper tension for the outer door. If aesthetic wooden panel are installed, you will have to adjust the door spring tension. Rotate the adjusting screw to drive the adjustor to strain or relax the steel cable(see figure 5).

Door spring tension is correct when the door remains horizontal in the fully opened position, yet rises to a close with the slight lift of a finger.

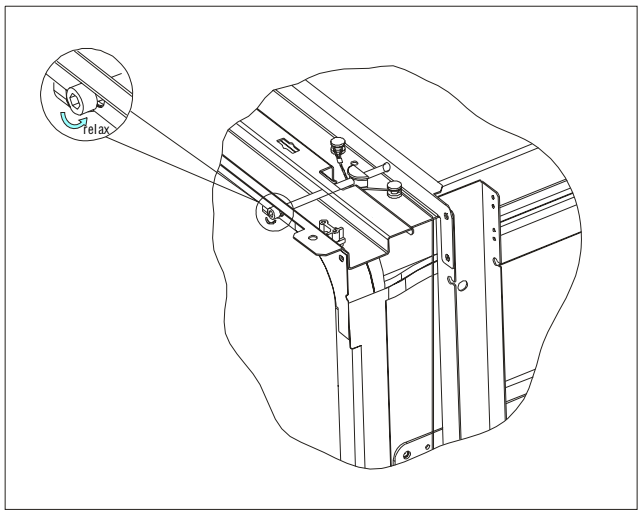

【Figure5】

Tension adjustment of the door spring

● Connection of drain hoses

Insert the drain hose into a drain pipe with a minimum diameter of 4cm, or let it run into the sink, making sure to avoid bending or crimping it. Use the speical plastic support that comes with the appliance (figure 6). The free and of the hose must be at a height between 400 and 1000mm and must not be immersed in water to avoid the back flow of it.ATTENTION: The special plastic hose support must be solidly fastened to the wall to prevent the drain hose from moving and allowing water to spill outside the drain.

【Figure6】

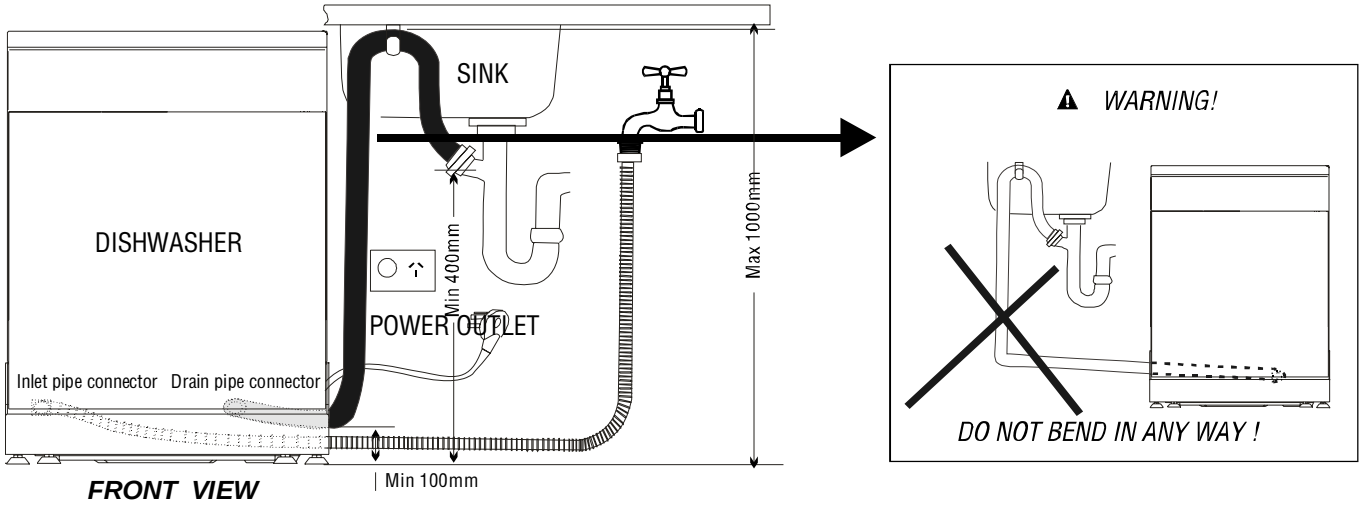

● Dishwasher installation steps

1 Install the furniture door to the outer door of the dishwasher using the brackets provided. Refer to the template for positioning of the brackets.

2 Adjust the tension of the door springs by using an Allen key turning in a clockwise motion to tighten the left and right door springs. Failure to do this could cause damage to your dishwasher (Illustration 2).

3 Connect the inlet hose to the cold water supply .

4 Connect the drain hose. Refer to diagram.(Figure 6)

5 Connect the power cord.

6 Affix the condensation strip under the work surface of cabinet. Please ensure the condensation strip is flush with edge of work surface.

7 Place the dishwasher into position.

8 Level the dishwasher. The rear feet can be adjusted from the front of the dishwasher by turning the screws on the left and right hand side of the cabinet (Illustration 6A). To adjust the front feet, use a wrench and turn the front feet until the dishwasher is level (Illustration 6B).

9 The dishwasher must be secured in place. There are two ways to do this:

A. Normal work surface–secure to the work surface by using two woodscrews ensuring the dishwasher weight is not being hit by the surface (Illustration 7).

B. Marble or granite work top–secure the bracket to the side panel of the dishwasher and secure the dishwasher to the furniture housing. Put the rubber cap over the screw (Illustration 8).

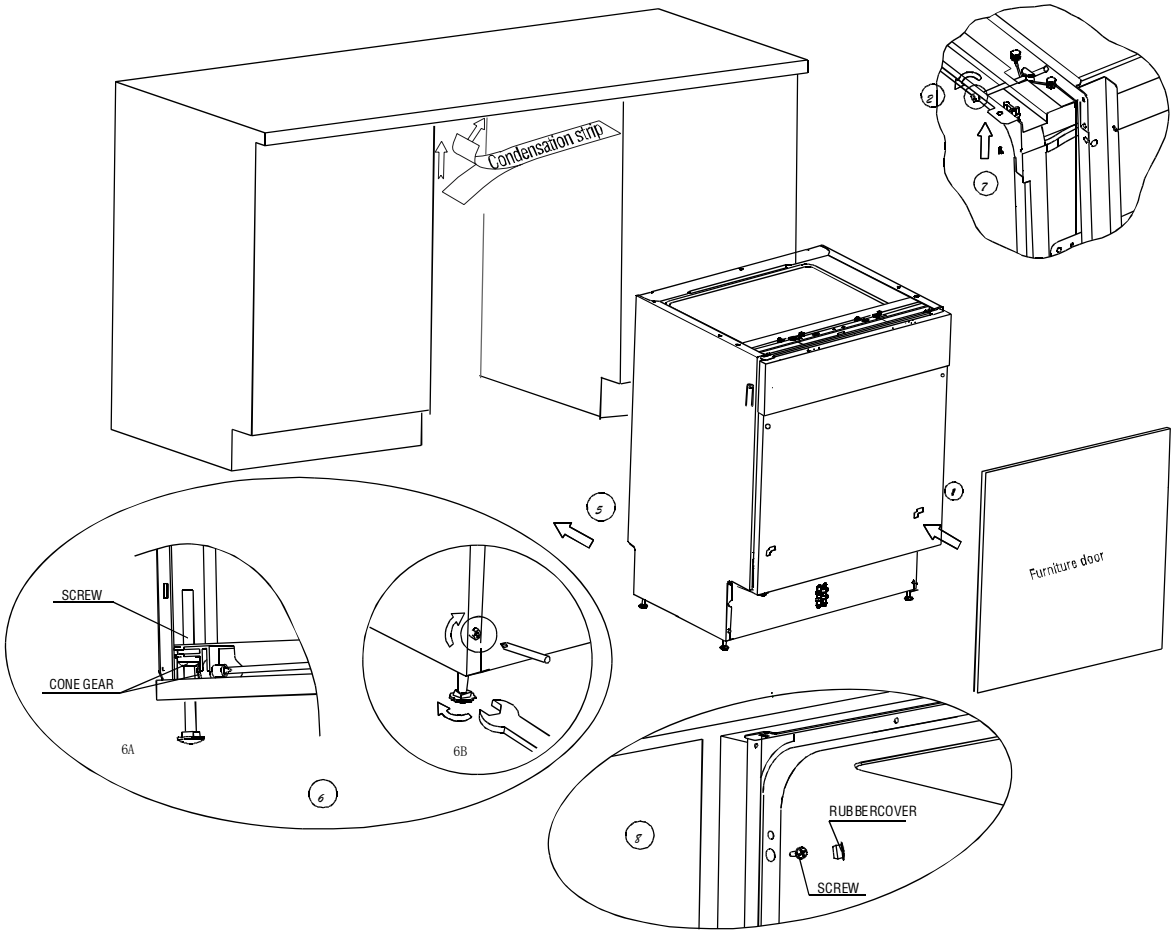

【 Figure 7 】

Dishwasher must be level for proper dish rack operation and wash performance.

1 Place level on door and rack track inside the tub as shown to check that the dishwasher is level.

2 level the dishwasher by adjusting the four leveling legs individually.

3 When level the dishwasher, please pay attention not to let the dishwasher tip over.

【 Figure 8 】

Illustration of feet adjustment

NOTE:
The maximum adjustment height of the feet is 60 mm.

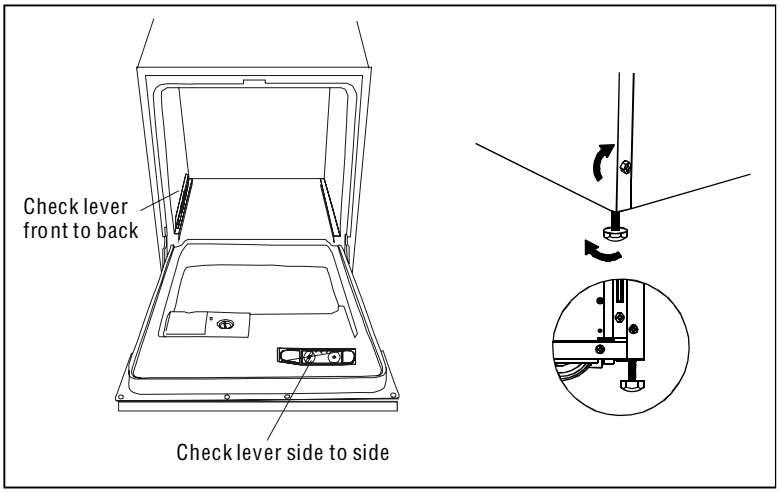

About Electricity Connecting

⚠ WARNING!

For personal safety:
- DO NOT USE AN EXTENSION CORD OR AN ADAPTER PLUG WITH THIS APPLIANCE.
- DO NOT, UNDER ANY CIRCUMSTANCES, CUT OR REMOVE THE EARTHING CONNECTION FROM THE POWER CORD.

Electrical Requirements

Please look at the rating label to know the rating voltage and connect the dishwasher to the appropriate power supply. Use the required fuse 10 amp, time delay fuse or circuit breaker recommended and provide separate circuit serving only this appliance.

Electrical Connection

⚠ *Insure proper ground exists before use*

Ensure the voltage and frequency of the power being corresponds to those on the rating plate. Only insert the plug into an electrical socket which is earthed properly. If the electrical socket to which the appliance must be connected is not appropriate for the plug , replace the socket, rather than using a adaptors or the like as they could cause overheating and burns.

GROUNDING INSTRUCTIONS

- This appliance must be earthed. In the event of a malfunction or breakdown, earthing will reduce the risk of electric shock by providing a path of least resistance for the electric current. This appliance is equipped with a cord having an equipment–earthing conductor and an earthing plug. The plug must be plugged into an appropriate outlet that is installed and earthed in accordance with all local standards and requirements.

⚠ WARNING!

- Improper connection of the equipment–grounding conductor can result in the risk of an electric shock. Check with a qualified electrician or service representative if you are in doubt whether the appliance is properly grounded. Do not modify the plug provided with the appliance; If it is not fit for the outlet. Have a proper outlet installed by a qualified electrician.

⚠ *WARNING!*

In order to avoid that there is more water staying in the inlet hose,
please close the hydrant after using.(For the models: no safety inlet hose.)

Cold Water Connection

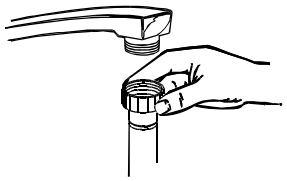

Connect the cold water supply hose to a threaded 3/4(inch) connector and make sure that it is fastened tightly in place.
If the water pipes are new or have not been used for an extended period of time, let the water run to make sure that the water is clear. This precaution is needed to avoid the risk of the water inlet to be blocked and damage the appliance.

Positioning the Appliance

Position the appliance in the desired location. The back should rest against the wall behind it, and the sides, along the adjacent cabinets or walls. The dishwasher is equipped with water supply and drain hoses that can be positioned either to the right or the left sides to facilitate proper installation.

How to Drain Excess Water From Hoses

If the sink is 1000 higher from the floor, the excess water in hoses cannot be drained directly into the sink. It will be necessary to drain excess water from hoses into a bowl or suitable container that is held outside and lower than the sink.

Water Outlet

Connect the water drain hose. The drain hose must be correctly fitted to avoid water leaks.
Ensure that the water inlet hose is not kinked or squashed.

Extension Hose

If you need a drain hose extension, make sure to use a similar drain hose.
It must be no longer than 4 metres; otherwise the cleaning effect of the dishwasher could be reduced.

Syphon Connection

The waste connection must be at a height of between 50 cm (minimum) and 100 cm (maximum) from the bottom of the dish. The water drain hose should be fixed by a hose clip.

Start of Dishwasher

The following things should be checked before starting the dishwasher.

1. The dishwasher is level and fixed properly
2. The inlet valve is open
3. There is a leakage at the connections of the conducts
4. The wires are tightly connected
5. The power is switched on
6. The inlet and drain hoses are knotted
7. All packing materials and printings should be taken out from the dishwasher

⚠ *Attention:* After installation, please make sure to keep this manual.
The content of this manual is very helpful to the users.

8.Troubleshooting Tips

Before Calling for Service

Review the charts on the following pages may save you from calling for service.



	Problem	Possible Causes	What To Do
Technical problems	*Dishwasher doesn't start*	Fuse blown, or the circuit breaker acted	Replace fuse or reset circuit breaker. Remove any other appliances sharing the same circuit with the dishwasher
		Power supply is not turned on	Make sure the dishwasher is turned on and the door is closed securely. Make sure the power cord is properly plugged into the wall socket.
		Error code:E1; Water pressure is low	Check that the water supply is connected properly and the water is turned on.
		Door of dishwasher not properly closed.	Make sure to close the door properly and latch it.
	water not pumped form dishwasher	Kink in drain hose	Check drain hose.
		Filter clogged	Check coarse the filter (see section titled " Cleaning The Filter ")
		Kitchen sink clogged	Check the kitchen sink to make sure it is draining well. If the problem is the kitchen sink not draining ,you may need a plumber rather than a serviceman for dishwashers.
General problems	*Suds in the tub*	Improper detergent	Use only the special dishwasher detergent to avoid suds. If this occurs, open the dishwasher and let suds evaporate. Add 1 gallon of cold water to the tub. Close and latch the dishwasher, then Start the "soak" wash cycle to drain out the water . Repeat if necessary.
		Spilled rinse–aid	Always wipe up rinse–aid spills immediately.
	Stained tub interior	Detergent with colourant was used	Make sure that the detergent is the one without colourant.
	White film on inside surface	Hard water minerals	To clean the interior, use a damp sponge with dishwasher detergent and wear rubber gloves. Never use any other cleaner than dishwasher detergent for the risk of foaming or suds.
	There are rust stains on cutlery	The affected items are not corrosion resistant.	
		A programme was not run after dishwasher salt was added. Traces of salt have gotten into the wash cycle.	Always run the quick wash programme . without any crockery in the dishwasher and without selecting the Turbo function (if present), after adding dishwasher salt.
		The lid of the softer is loose	Check the lip .Ensure the fix is fine.
Noise	*Knocking noise in the wash cabinet*	A spray arm is knocking against an item in a basket	Interrupt the programme, and rearrange the items which are obstructing the spray arm.
	Rattling noise in the wash cabinet	Items of crockery are loose in the wash cabinet	Interrupt the programme, and rearrange the items of crockery.
	Knocking noise in the water pipes	This may be caused by on–site installation or the cross–section of the piping.	This has no influence on the dishwasher function. if in doubt, contact a suitably qualified plumber.

	Problem	Possible Causes	What To Do
Unsatis –factory washing result	*The dishes are not clean*	The dishes were not loaded correctly.	See notes in " Loading the Dishwasher Baskets ".
		The programme was not powerful enough.	Select a more intensive programme. See" Wash Cycle Table ".
		Not enough detergent was dispensed.	Use more detergent, or change your detergent.
		Items are blocking the path of spray arms.	Rearrange the items so that the spray can rotate freely.
		The filter combination in the base of wash cabinet is not clean or is not correctly fitted. This may cause the spray arm jets to get blocked.	Clean and/or fit the filter combination correctly. Clean the spray arm jets. See "Cleaning the Spray Arms".
	Cloudiness on glassware	Combination of soft water and too much detergent.	Use less detergent if you have soft water and select a shortest cycle to wash the glassware and to get them clean.
	Black or gray marks on dishes	Aluminum utensils have rubbed against dishes.	Use a mild abrasive cleaner to eliminate those marks.
	Detergent left in dispenser cups	Dishes block detergent cups.	Re–loading the dishes properly.
Unsatis –factory drying result	*The dishes are not drying*	Improper loading	Load the dishwasher as suggested in the directions.
		Too little rinse–aid	Increase the amount of rinse–aid/refill the rinse–aid dispenser.
		Dishes are removed too soon	Do not empty your dishwasher immediately after washing. Open the door slightly so that the steam can escape. Begin unloading the dishwasher only once t he dishes are barely warm to the touch. Empty the low basket first. This prevents water form dropping off dishes in the upper basket.
		Wrong program has been selected	In short program the washing temperature is lower. This also lowers cleaning performance. Choose a program with a long washing time.
		Use of cutlery with a low–quality coating	Water drainage is more difficult with these items. Cutlery or dishes of this type are not suitable for washing in the dishwasher.

ERROR CODES

When some malfunctions come on, the appliance will display error codes to warn you:

Codes	*Meanings*	*Possible Causes*
E1	Longer inlet time	Faucets is not opened
E4	Overfilled	Some elements of dishwasher leaked

⚠ WARNING!

- If overflow occurs, turn off the main water supply before calling a service.
- If there is water in the base pan because of an overfill or small leak, the water should be removed before restarting the dishwasher.

Height :	820mm(adjustable+60mm)
Width :	595mm
Depth :	540mm
Voltage connected Load :	see rating label
Water pressure:	0.04–1.0MPa
Power supply:	see rating label
Capacity:	12 Place settings

READ THE INSTRUCTION BOOKLET BEFORE INSTALLING AND USING THE APPLIANCE.

The manufacturer will not be responsible for any damage to property or to persons caused by incorrect installation or improper use of the appliance.

The manufacturer is not responsible for any inaccuracies, due to printing or transcription errors, contained in this handout. In addition, the appearance of the figures reported is also purely indicative.

The manufacturer reserves the right to make changes to its products when considered necessary and useful, without affecting the essential safety and operating characteristics.

Technika constantly seeks ways to improve the specifications and designs of their products.

Whilst every effort is made to produce up to date literature, this document should not be regarded as an infallible guide. Actual product only should be used to derive cut out sizes.

All Technika Appliances must be installed by a qualified person/s with adherence to the relevant electrical, plumbing and AGA codes, with compliance being issued as required by state or national legislation.

Additionally all Technika Upright cookers must have chains installed correctly in adherence to the relevant AGA, and plumbing codes by the Licenced installer.

For maximum effectiveness and efficiency all rangehoods should be installed with the use of ductwork, by a licenced installer with adherence to the relevant state and national building codes and regulations.

All Technika appliances are for Domestic use only, and must be installed by a licence installer into Domestic Applications only, without exception and to the required Authorities guidelines. Any installation outside of this will VOID warranty. Alfresco areas are not a Domestic application.

TECHNIKA

TECHNIKA PTY LTD ACN 069 686 326
77 Fillo Drive Somerton Victoria 3062
General: 1800 649 969 - Service & Spare Parts: 1800 333 244
Technika After Sales Service - P.O. Box 543 SOMERTON VIC 3062