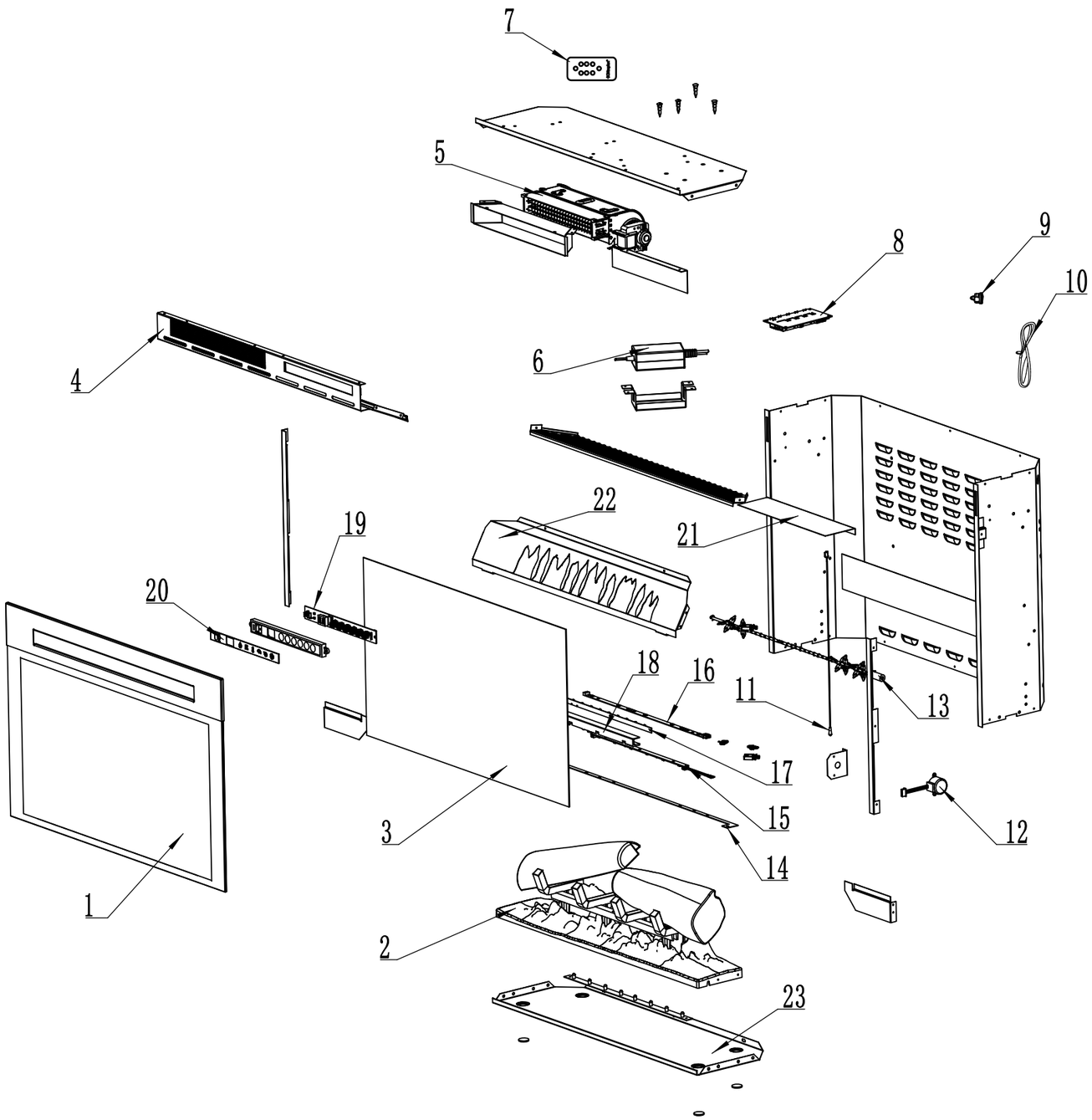

23	05.03.001.178		1				
22	05.03.032.019		1	spcc 0.7mm			
21	05.03.011.091		1	spcc 0.6mm			
20	11.09.003.007		1	PC			
19	03.08.006.017		1				
18	02.01.009.024		1	ABS V0			
17	3001850100		1				
16	03.08.004.074		1				
15	3001880100		1				
14			1				
13	06.10.001.019		1				
12	03.01.002.003		1				
11	03.08.008.003		1				
10	03.21.002.015		1				
9	02.01.008.006		1				
8	03.08.002.045		1				
7	03.09.001.037		1				
6	03.20.002.023		1				
5	06.02.001.056		1				
4	05.02.029.027		1				
3	04.01.001.167		1				
2	06.04.003.253		1				
1	04.02.001.141		1				

Model: BDG15-AU

No	Part No.	Description	Comments
	03.09.001.053	BDG15-AU REMOTE CONTROL	