Esploso Ricambi

Gestione / Prodotti / **Esploso Ricambi**

# Prodotto: K304006 [C2-- A -70 IX4 PR01 1 TC--C 2A 2A --- LINEA GA]

## Data validità: 13/09/2004

Cliente: GLEN DIMPLEX AUSTRALIA PTY

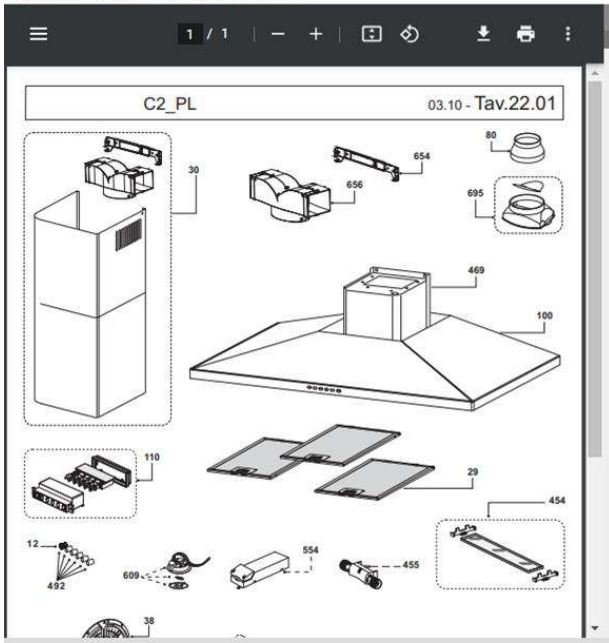


Data BOM 18/10/2004 Lingua Inglese

| Posizione | Codice | Num.Art. | Descrizione | Quantità | Prezzo |
|---|---|---|---|---|---|
| 12 | 00SP0012000 | | WARNING GEM | 1.00 | 0.54€ |
| 29 | 00SP002970C1 | | PANEL | 1.00 | 5.82€ |
| 30 | 00SP064400X | | CHIMNEY | 1.00 | |
| 38 | SPK0012 | | HOLDER MOTOR | 1.00 | |
| 39 | 00SP0039000 | | CONVEYOR | 1.00 | 5.31€ |
| 40 | SPK0010 | | NR.4 FAN WHEEL | 1.00 | |
| 70 | SPK0021 | | MOTOR | 1.00 | |
| 80 | SPK0004 | | REDUCTION | 1.00 | 2.10€ |
| 100 | 00SP06457PAX | | BODY | 1.00 | |
| 110 | SPK0053 | | CONTROL | 1.00 | |
| 130 | SPK0048 | | BRANCH CIRCUIT BOARD | 1.00 | |
| 140 | SPK0022 | | MOTOR GROUP | 1.00 | |
| 469 | 00SP0469000 | | BODY FOR TANGENTIAL MOTOR | 1.00 | |
| 492 | 00SP049200C | | BUTTONS | 1.00 | 1.69€ |
| 554 | 00SP0554000 | | TRANSFORMER | 1.00 | 9.48€ |
| 609 | SPK0931 | | LAMP | 1.00 | 4.38€ |
| 654 | 00SP0654000 | | CHIMNEY STIRRUP | 1.00 | 0.73€ |
| 656 | 00SP0656000 | | AIR DEVIATOR | 1.00 | 4.05€ |
| 695 | 00SP0695000 | | FLANGE 150 + VALVE | 1.00 | |