USER MANUAL

60CM COOKTOP

RT64

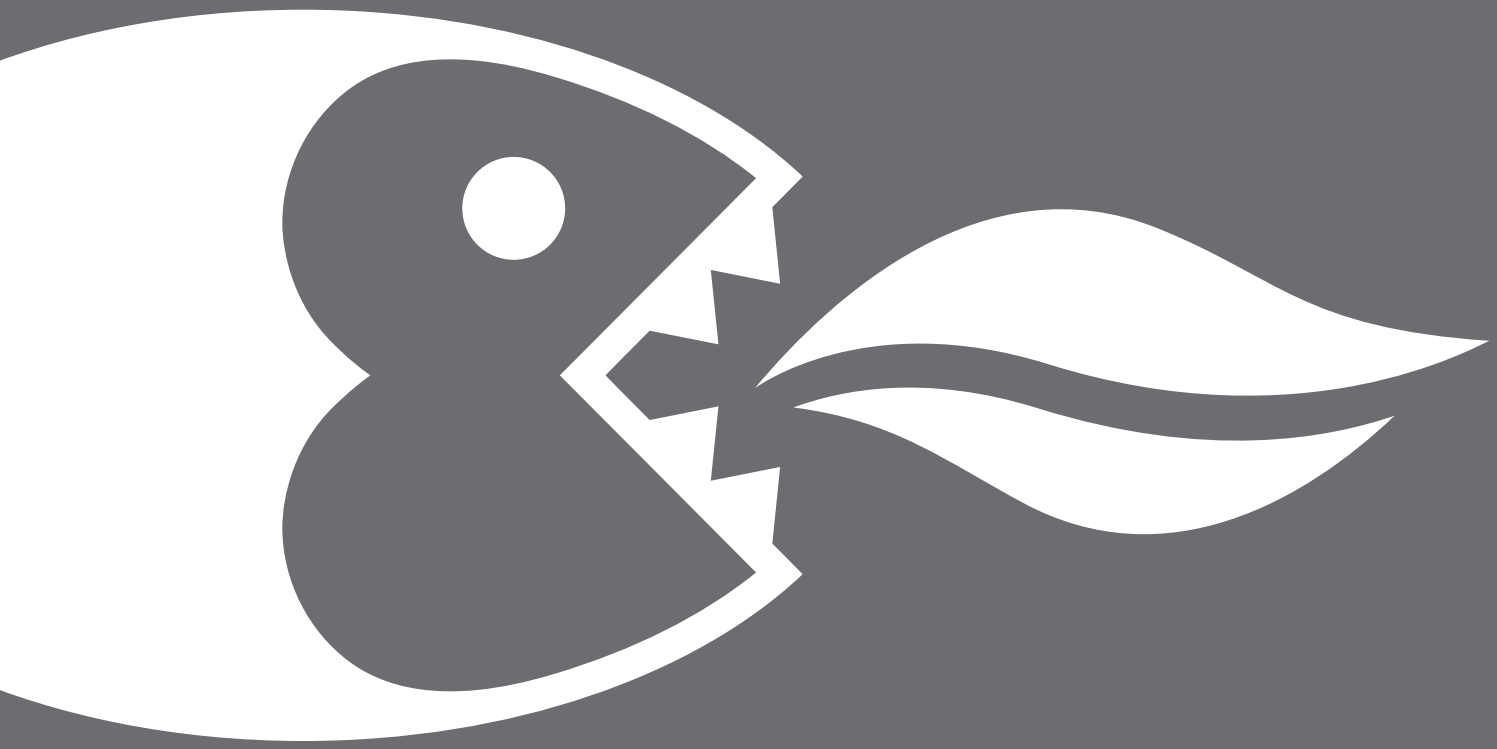

Baumatic®

www.baumatic.com.au

Please read this user manual first!

Dear Customer,
Thank you for purchasing this Baumatic product. We hope that you get the best results from your product which has been manufactured with high quality and state-of-the-art technology. Therefore, please read this entire user manual and all other accompanying documents carefully before using the product and keep it as a reference for future use. If you handover the product to someone else, give the user manual as well. Follow all warnings and information in the user manual.
Remember that this user manual is also applicable for several other models. Differences between models will be identified in the manual.

Explanation of symbols
Throughout this user manual the following symbols are used:


Important information or useful hints about usage.


Warning of hazardous situations with regard to life and property.


Warning of electric shock.


Warning of risk of fire.


Warning of hot surfaces.

CE

TABLE OF CONTENTS

1 Important instructions and warnings for safety and environment 4

General safety 4
Electrical safety 4
Product safety 5
Intended use 6
Safety for children....6
Disposing of the old product....7
Package information 7

2 General information 8

Overview....8
Technical specifications 8

3 Installation 9

Before installation....9
Installation and connection 10
Future Transportation....11

4 Preparation 12

Tips for saving energy 12
Initial use.... 12
First cleaning of the appliance.... 12

5 How to use the hob 13

General information about cooking 13
Using the hobs.... 13
Control panel 14

6 Maintenance and care 18

General information.... 18
Cleaning the hob.... 18

7 Troubleshooting 19

1 Important instructions and warnings for safety and environment

This section contains safety instructions that will help protect from risk of personal injury or property damage. Failure to follow these instructions shall void any warranty.

General safety

- The appliance is not intended for use by persons (including children) with reduced physical, sensory or mental capabilities, or lack of experience and knowledge, unless they have been given supervised or instruction concerning use of the appliance by a responsible person for their safely.
- Young children should be supervised to ensure that they do not play with the appliance.
- Installation and repair procedures must always be performed by Authorized Service Agents. The manufacturer shall not be held responsible for damages arising from procedures carried out by unauthorized persons which may also void the warranty. Before installation, read the instructions carefully.
- Do not operate the product if it is defective or has any visible damage.
- Control that the product function knobs are switched off after every use.

Electrical safety

- If the product has a failure, it should not be operated unless it is repaired by the Authorized Service Agent. There is the risk of electric shock!
- Only connect the product to a grounded outlet/line with the voltage and protection as specified in the “Technical specifications”. Have the grounding installation made by a qualified electrician while using the product with or without a transformer. Our company shall not be liable for any problems arising due to the product not being earthed in accordance with the local regulations.
- Never wash the product by spreading or pouring water onto it! There is the risk of electric shock!
- The product must be unplugged during installation, maintenance, cleaning and repairing procedures.
- If the supply cord is damaged, it must be replaced by the manufacturer or its service agent or a similarly qualified person in order to avoid a hazard.

- The appliance must be installed so that it can be completely disconnected from the network. The separation must be provided either by a mains plug, or a switch built into the fixed electrical installation, according to construction regulations.
- If the electrical supply is restricted, means of all-pole disconnection must be accessible and incorporated in the fixed wiring in accordance with the wiring rules.
- Any work on electrical equipment and systems should only be carried out by authorized and qualified persons.
- In case of any damage, switch off the product and disconnect it from the mains. To do this, turn off the fuse at home.
- Make sure that fuse rating is compatible with the product.

Product safety

- Never use the product when your judgment or coordination is impaired by the use of alcohol and/or drugs.
- Be careful when using alcoholic drinks in your dishes. Alcohol evaporates at high temperatures and may cause fire since it can ignite when it comes into contact with hot surfaces.
- Do not place any flammable materials close to the product as the sides may become hot during use.
- Keep all ventilation slots clear of obstructions.
- Do not use a steam cleaner to clean this appliance.
- Unattended cooking on a hob with fat or oil can be dangerous and may result in fire. NEVER try to extinguish a fire with water, but switch off the appliance and then cover flame e.g. with a lid or a fire blanket.
- Danger of fire: Do not store items on the cooking surfaces.
- WARNING: If the surface is cracked, switch off the appliance to avoid the possibility of an electric shock
- After use, switch off the hob element by its control and do not rely on the pan detector.
- Metallic objects such as knives, forks, spoons and lids should not be placed on the hotplate since they can get hot.
- The appliance is not intended to be operated by means of an external timer or separate remote-control system.
- Vapour pressure that build up due to the moisture on the hob surface or at the bottom of the pot can cause the pot to move.

Therefore, make sure that the oven surface and bottom of the pots are always dry.

- Hotplates are equipped with "Induction" technology. Your induction hob that provides both time and money savings must be used with pots suitable for induction cooking; otherwise hotplates will not operate. See.*General information about cooking, page 13*, selecting the pots.
- As induction hobs create a magnetic field, they may cause harmful impacts for people who use devices such as insulin pump or pacemaker.
- Use only hob guards designed by the manufacturer of the cooking appliance or indicated by the manufacturer of the appliance in the instructions for use as suitable or hob guards incorporated in the appliance. The use of inappropriate guards can cause accidents.

For the reliability of the fire of the product;

- Make sure the plug is fitting to socket as well for not cause to spark.
- Do not use damaged or cutted or extension cable except the original cable.
- Make sure that not whether liquid or moisture on the socket is pluged to product .

Intended use

- This product is designed for domestic use. Commercial use will void the guarantee.
- This appliance is for cooking purposes only. It must not be used for other purposes, for example room heating.
- The manufacturer shall not be liable for any damage caused by improper use or handling errors.

Safety for children

- WARNING: Accessible parts will become hot when in use. To avoid burns and scalds children should be kept away.
- The packaging materials will be dangerous for children. Keep the packaging materials away from children. Please dispose of all parts of the packaging according to environmental standards.
- Electrical products are dangerous to children. Keep children away from the product when it is operating and do not allow them to play with the product.
- Do not place any items above the appliance that children may reach for.

Disposing of the old product

Compliance with the WEEE Directive and Disposing of the Waste Product:



This product complies with EU WEEE Directive (2012/19/EU). This product bears a classification symbol for waste electrical and electronic equipment (WEEE).
This product has been manufactured with high quality parts and materials which can be reused and are suitable for recycling. Do not dispose of the waste product with normal domestic and other wastes at the end of its service life. Take it to the collection center for the recycling of electrical and electronic equipment. Please consult your local authorities to learn about these collection centers.

Compliance with RoHS Directive:
The product you have purchased complies with EU RoHS Directive (2011/65/EU). It does not contain harmful and prohibited materials specified in the Directive.

Package information

- Packaging materials of the product are manufactured from recyclable materials in accordance with our National Environment Regulations. Do not dispose of the packaging materials together with the domestic or other wastes. Take them to the packaging material collection points designated by the local authorities.

2 General information

Overview

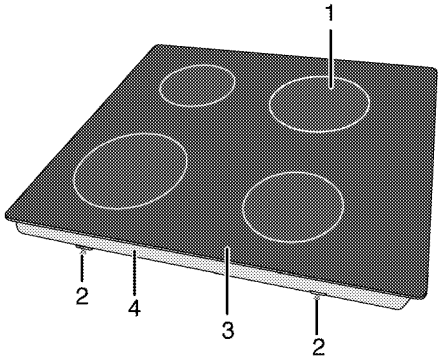

1	Single-circuit cooking plate	3	Burner plate
2	Assembly clamp	4	Base cover

Technical specifications

Voltage / frequency	**220-240 V~ /380-415 V 2N ~ 50 Hz**
Total power consumption	6000 W
Fuse	min. 16A x 2 / 25 A
Cable type / section	H05RR-F 5 x 1,5 mm^2 / 3 x 2,5 mm^2
External dimensions (height / width / depth)	**55 mm/580 mm/510 mm**
Installation dimensions (width / depth)	560 mm/490)mm
Burners	
Front left	**Single-circuit cooking plate**
Dimension	180mm
Power	1800 W
Rear left	**Single-circuit cooking plate**
Dimension	140 mm
Power	1200 W
Rear right	**Single-circuit cooking plate**
Dimension	180 mm
Power	1800 W
Front right	**Single-circuit cooking plate**
Dimension	140 mm
Power	1200 W

Technical specifications may be changed without prior notice to improve the quality of the product.

Figures in this manual are schematic and may not exactly match your product.

Values stated on the product labels or in the documentation accompanying it are obtained in laboratory conditions in accordance with relevant standards. Depending on operational and environmental conditions of the product, these values may vary.

3 Installation

Product must be installed by a qualified person in accordance with the regulations in force. The manufacturer shall not be held responsible for damages arising from procedures carried out by unauthorized persons which may also void the warranty.

Preparation of location and electrical installation for the product is under customer's responsibility.

DANGER:
The product must be installed in accordance with all local electrical regulations.

DANGER:
Prior to installation, visually check if the product has any defects on it. If so, do not have it installed.
Damaged products cause risks for your safety.

Before installation

The hob is designed for installation into commercially available work tops. A safety distance must be left between the appliance and the kitchen walls and furniture. See figure (values in mm).

- It can also be used in a free standing position. Allow a minimum distance of 750 mm above the hob surface.
- (*) If a cooker hood is to be installed above the cooker, refer to cooker hood manufacturer' instructions regarding installation height (min 650 mm)
- Remove packaging materials and transport locks.
- Surfaces, synthetic laminates and adhesives used must be heat resistant (100 °C minimum).
- The worktop must be aligned and fixed horizontally.
- Cut aperture for the hob in worktop as per installation dimensions.

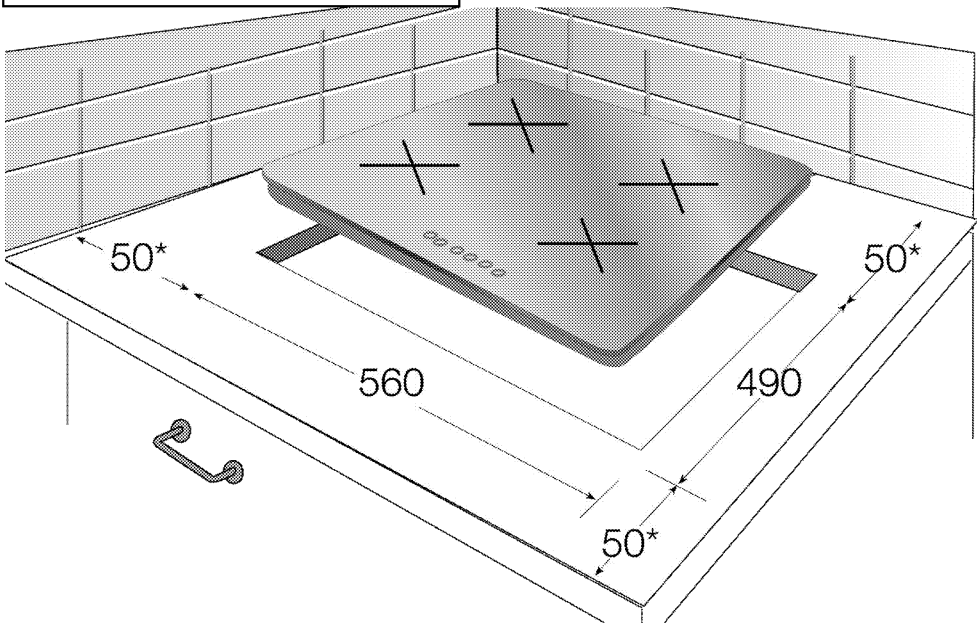

* min.

Installation and connection

- The product must be installed in accordance with all local gas and electrical regulations.

Do not install the hob on places with sharp edges or corners.
There is the risk of breaking for glass ceramic surface!

Electrical connection

Connect the product to a grounded outlet/line protected by a fuse of suitable capacity as stated in the "Technical specifications" table. Have the grounding installation made by a qualified electrician while using the product with or without a transformer. Our company shall not be liable for any damages that will arise due to using the product without a grounding installation in accordance with the local regulations.

DANGER:
The product must be connected to the mains supply only by an authorised and qualified person. The product's warranty period starts only after correct installation.
Manufacturer shall not be held responsible for damages arising from procedures carried out by unauthorised persons.

DANGER:
The power cable must not be clamped, bent or trapped or come into contact with hot parts of the product.
A damaged power cable must be replaced by a qualified electrician. Otherwise, there is risk of electric shock, short circuit or fire!

- Connection must comply with national regulations.
- The mains supply data must correspond to the data specified on the type label of the product. Type label is at the rear housing of the product.
- Power cable of your product must comply with the values in "Technical specifications" table.

DANGER:
Before starting any work on the electrical installation, disconnect the product from the mains supply.
There is the risk of electric shock!

Connecting the power cable

1. **If a power cable is not supplied together with your product,** a power cable that you would select from the table (*Technical specifications, page 8*) in accordance with the electrical installation at your home must be connected to your product by following the instructions in cable diagram.

If it is not possible to disconnect all poles in the supply power, a disconnection unit with at least 3 mm contact clearance (fuses, line safety switches, contactors) must be connected and all the poles of this disconnection unit must be adjacent to (not above) the product in accordance with IEE directives. Failure to obey this instruction may cause operational problems and invalidate the product warranty.

Additional protection by a residual current circuit breaker is recommended.

2. Open the terminal block cover with a screwdriver.
3. Insert the power cable through the cable clamp below the terminal and secure it to the main body with the integrated screw on cable clamping component.
4. Connect the cables according to the supplied diagram.

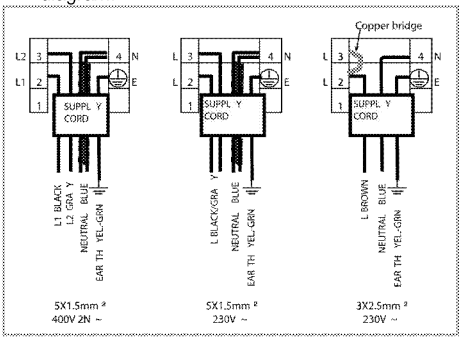

5. After completing the wire connections, close the terminal block cover.
6. Route the power cable so that it will not contact the product and get squeezed between the product and the wall.

Power cable must not be longer than 2 m because of safety reasons.

Installing the product

1. Turning the hob upside down, place it on a flat surface.
2. The sealing gasket provided in the package must be applied on the lower casing bend around the hob as shown in the figure, during installation of the hob.

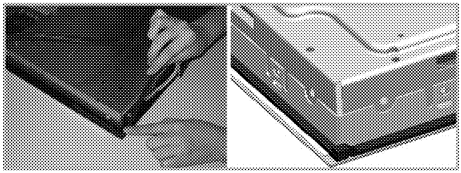

3. Place the hob on the counter and align it.
4. Using the installation clamps secure the hob by fitting through the holes on the lower casing.

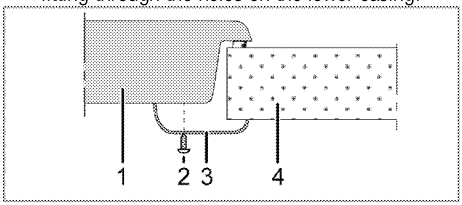

1 Hob
2 Screw
3 Installation clamp
4 Counter

When installing the hob onto a cabinet, a shelf must be installed in order to separate the cabinet from the hob as illustrated in the above figure. This is not required when installing onto a built-in oven.

For example, if it is possible to touch the bottom of the product since it is installed onto a drawer, this section must be covered with a wooden plate.

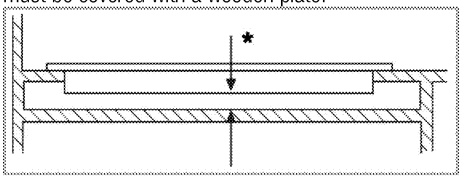

* min. 15 mm

Rear view (connection holes)

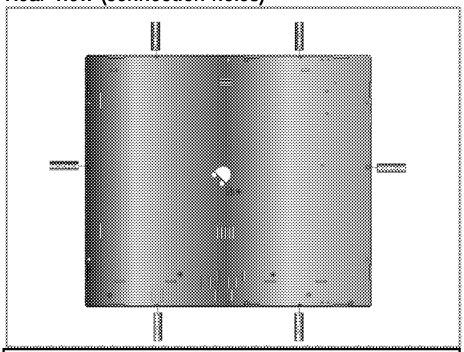

Connection clamps will be supplied as installed onto the hob.
Making connections to different holes is not a good practice in terms of safety since it can damage the gas and electrical system.

Final check

1. Plug in the power cable and switch on the product's fuse.
2. Check the functions.

Future Transportation

- Keep the product's original carton and transport the product in it. Follow the instructions on the carton. If you do not have the original carton, pack the product in bubble wrap or thick cardboard and tape it securely.

Check the general appearance of your product for any damages that might have occurred during transportation.

4 Preparation

Tips for saving energy

The following information will help you to use your appliance in an ecological way, and to save energy:

- Defrost frozen dishes before cooking them.
- Use pots/pans with cover for cooking. If there is no cover, energy consumption may increase 4 times.
- Select the burner which is suitable for the bottom size of the pot to be used. Always select the correct pot size for your dishes. Larger pots require more energy.
- Pay attention to use flat bottom pots when cooking with electric hobs.
  Pots with thick bottom will provide a better heat conduction. You can obtain energy savings up to 1/3.
- Vessels and pots must be compatible with the cooking zones. Bottom of the vessels or pots must not be smaller than the hotplate.
- Keep the cooking zones and bottom of the pots clean. Dirt will decrease the heat conduction between the cooking zone and bottom of the pot.
- For long cookings, turn off the cooking zone 5 or 10 minutes before the end of cooking time. You can obtain energy savings up to 20% by using the residual heat.

Initial use

First cleaning of the appliance

The surface might get damaged by some detergents or cleaning materials.
Do not use aggressive detergents, cleaning powders/creams or any sharp objects during cleaning.
Do not use harsh abrasive cleaners or sharp metal scrapers to clean the oven door glass since they can scratch the surface, which may result in shattering of the glass.

1. Remove all packaging materials.
2. Wipe the surfaces of the appliance with a damp cloth or sponge and dry with a cloth.

5 How to use the hob

General information about cooking



Never fill the pan with oil more than one third of it. Do not leave the hob unattended when heating oil. Overheated oils bring risk of fire. **Never attempt to extinguish a possible fire with water!** When oil catches fire, cover it with a fire blanket or damp cloth. Turn off the hob if it is safe to do so and call the fire department.

- Before frying foods, always dry them well and gently place into the hot oil. Ensure complete thawing of frozen foods before frying.
- Do not cover the vessel you use when heating oil.
- Place the pans and saucepans in a manner so that their handles are not over the hob to prevent heating of the handles. Do not place unbalanced and easily tilting vessels on the hob.
- Do not place empty vessels and saucepans on cooking zones that are switched on. They might get damaged.
- Operating a cooking zone without a vessel or saucepan on it will cause damage to the product. Turn off the cooking zones after the cooking is complete.
- As the surface of the product can be hot, do not put plastic and aluminum vessels on it.
  Clean any melted such materials on the surface immediately.
  Such vessels should not be used to keep foods either.
- Use flat bottomed saucepans or vessels only.
- Put appropriate amount of food in saucepans and pans. Thus, you will not have to make any unnecessary cleaning by preventing the dishes from overflowing.
  Do not put covers of saucepans or pans on cooking zones.
  Place the saucepans in a manner so that they are centered on the cooking zone. When you want to move the saucepan onto another cooking zone, lift and place it onto the cooking zone you want instead of sliding it.

Tips about glass ceramic hobs

- Glass ceramic surface is heatproof and is not affected by big temperature differences.
- Do not use the glass ceramic surface as a place of storage or as a cutting board.
- Use only the saucepans and pans with machined bottoms. Sharp edges create scratches on the surface.
- Do not use aluminum vessels and saucepans. Aluminum damages the glass ceramic surface.

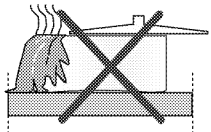

Spills may damage the glass ceramic surface and cause fire.

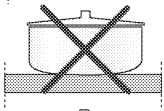

Do not use vessels with concave or convex bottoms.

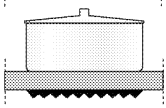

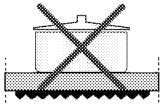

Use only the saucepans and pans with flat bottoms. They ensure easier heat transfer.
If the diameter of the saucepan is too small, energy will be wasted.

Using the hobs

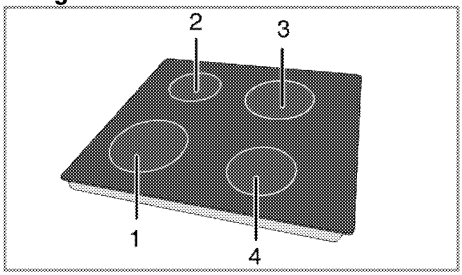

1 Single-circuit cooking plate 18-20 cm
2 Single-circuit cooking plate 14-16 cm
3 Single-circuit cooking plate 18-20 cm
4 Single-circuit cooking plate 14-16 cm is list of advised diameter of pots to be used on related burners.

Cover of the product is connected to a gas shut off installation. When the cover is closed, the gas supply to the burner is shut off.

DANGER:
Do not allow any object to drop on the hob. Even small objects such as a saltshaker may damage the hob.
Do not use cracked hobs. Water may leak through these cracks and cause short circuit. In case of any kind of damage on the surface (eg., visible cracks), switch off the product immediately to minimize the risk of electric shock.

Quick heating glass-ceramic hobs emit a bright light when they are switched on. Do not stare at the bright light.

Control panel

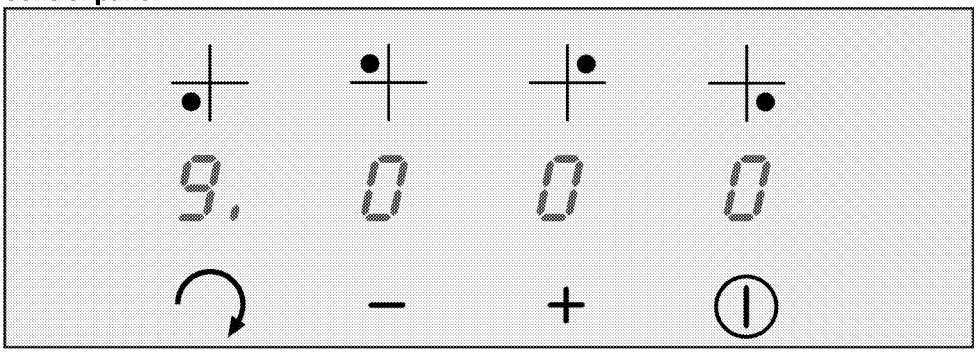

Features

Main switch - ON/OFF Key

Heat setting

Heat setting

Hotplate selection (toggle) control

Hotplate (cooking zone) Selection indicator

Hotplate display (heat setting 0...9)

Note :

- This appliance controls via the touch control unit.
- Always keep the control panels clean and dry. Moisture and dirt may impair function.
- The graphics and figures are for illustration purposes only. The actual view or functions may differ.

Turn on the hob

Touch the "⏻" key in the control panel at least 1 second. The hotplate displays will light up. The hob is ready for use. You can now turn on (select) different hotplates within next 10 seconds. While operating the main switch "⏻", it is not allowed to operate other controls.

Hotplate displays flashes "0." and all related decimal points.

The hob will be set automatically stand by mode if there is no operation within 10 seconds.

If the main switch "⏻" is touched more than 2sec, the hob is turned off and is set into the stand-by mode again.

Select Hotplates (Cooking Zone)

1. Turn on the hob.
2. Touch hotplate selection control for desired hotplate. After selection of the hotplate, the decimal point of the related hotplate display "0." flashes.
3. Set the heat level between **"1"** and **"9"** or **"9"** and **"1"** by touching the "+" or "−" keys.

The "+" or "−" keys are equipped with a repeat function. If you touch one of the key longer time, heat

level will continually be increased or reduced at every 0,4 second.

If you begin with "+" key, **"9"** will appear.

The hob will be set automatically stand by mode if there is no operation within 10 seconds.

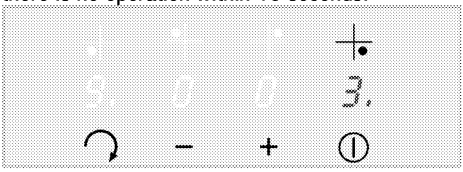

Turn off the hob

If the main switch "⏻" is touched more than 2sec, the hob is turned off and is set into the stand-by mode again.

If there is a residual heat available when the hob is turned off, this will be indicated by a steady "H" in the relevant hotplate display.

Turn off individual hotplates :

A selective hotplate can be turned off with 2 different ways:

1. Simultaneous touching of the "+" and "—" keys
2. Reduction of the heat setting to **"0"** by touching the "—" key

1. Simultaneous operation of the "+" and "—" keys

The desired hotplate must be chosen with the hotplate selection key . The decimal point appears in the hotplate display "0.". The "+" and "—" keys must be touched at the same time to turn off the hotplate.

2. Reduction of the heat setting to "0" by operating the "—" key of the desired hotplate

The hotplate can also be turn off by reducing the heat setting to **"0"**.

Heat Boost

This function makes cooking easier. If the heat boost is active, than the hotplate will be operated with maximum power for a period of time (see table-1). Heat boost time is depending on selected heat level. This is indicated through a flashing **"A"** alternating with the heat setting value (e.g. half second **"A"** and half second **"9"**) in the hotplate display. At the end of the heat boost time, hob will turn down the heat setting value you selected will be indicated continually. Every hotplate is a equipped with heat boost functionality.

Turn on heat boost feature :

1. Turn on the hob.
2. Select desired hotplate by touching hotplate selection keys.
3. Select the hotplate heat settings value **"9"** using "—" key. After heat setting, "9" and "A" will be indicated alternating. This means heat setting value **"9"** and heat boost feature is active now.
4. Then set the desired heat setting value at which the cooking will continue at the end of heat boost time, using "—" key within 10 seconds. By touching the "+" or "—" keys of the hotplate, the heat setting between **"9"** and **"1"** can be used. (e.g. you set the level 6).
5. The display alternates during heat boost cooking between **"A"** and **"6"** (e.g.) At the end of the heat boost time **"6"** will be indicated continually.

Turn off heat boost feature :

- The heat boost can be turned off early by touching the "—" key until heat setting **"0"** appears.
- Power boost can be erased by operating "+" and "—" sensor simultanously or decrease level stepwise with touching "—" to **"0"**.

*** Activate extended zone: (* If your hob equipped with these function)**

Basic zone has to be adjusted to a level bigger than 0. Heater with extended heater has to be selected (Selected cooking level is flashing in display) Touch "+" and "—" sensor simultanously: Extended Zone is activated, indicated with the **"."** (dot) in the sevensegment display. Extended Zone can be errased by again touching "+" and "—" sensor simultanously. Another simultanous touch of "+" and "—" sensor errases cooking level to "0".

Child lock

To prevent children from turning on the hotplates, you can secure the hob against being turned on inadvertently. Child Lock functionality is foreseen to lock the touch control unit in a complicated Multi-Step process.

Child Locking and unlocking is only available in the Stand by -mode.

How to lock the module:

1. Turn on the hob using main switch "⏻".
2. Simultaneously touching the and "—" for at least 2 sec.

3. Then touch again "+" key. Child lock function will be activated and all hotplate displays will indicate "L" symbol.

Cancel child lock:

The same way the Child lock is activated, it can also get for deactivating.

1. Turn on the hob using main switch "⏻".
2. Simultaneously touching the and "—" keys for at least 2 sec. 3. Then touch again " " key.
3. Then touch again "+" key.

All hotplate display is indicated "L" during period of unlocking. "L" will be disappear immediately after successful unlocking.

Table -1: Heat setting parameters, Cycle Time 47,0 s

Heat setting	OFF- Time period in s	ON- Time period in s	Operating time limitation in h	Heat boost duration in s
0	0	0	0	-
U	45,9	1,1	6	-
1	45,6	1,4	6	60
2	43,6	3,4	6	180
3	41,3	5,7	5	288
4	38,4	8,6	5	390
5	35,9	11,1	4	510
6	33,1	13,9	1,5	150
7	26,2	20,8	1,5	210
8	19,2	27,8	1,5	270
9	0	47,0	1,5	-

Residual Heat Functions

An "H" (residual heat) lights up on the hotplate displays of a deactivated hotplate or hob if a surface temperature of over 60°C was determined for the hob. A “0” will light up on the display when the residual heat falls down from 60°C. After an interruption of the supply voltage occurred, that the residual heat display flashes, if the corresponding hotplate had a residual heat of greater than 60 °C before the power interruption occurred. The display will flash until the max. residual heat time has expired or the hotplate will be selected and activated.

Sensor calibration and error messages

The hob control performs an automatic calibration in reference to the sensor-, glass- and ambient conditions after the main voltage is applied. No objects are allowed to cover the glass area of the sensor during the calibration. In addition, the hob control cannot be exposed to strong illumination, like sunlight, strong halogen lights, etc.

Operating time limitations

The hob control has a limitation of the operating time. If one or more hotplates are inadvertently not switched off , hotplate will be automatically deactivated after a certain amount of time. (see table- 1 below) The limit of the operating time depends of the selected heat setting. If a timer was associated with the hotplate than a **“00”** will be displayed on the timer display for 10 seconds.(after 10 seconds residual heat indicator will light). Afterwards the timer display switches off. After an automatic switch off of the hotplate, as described above, the hotplate is re-operable again and the maximum operating time for this heat setting is applied.

Table-2: Error codes and source of errors

Error reason	Display
Ambient light to high	F1
Strong pulsating light (fluorescent tube)	F2
Sensor covered with a bright object	F3
Strongly fluctuating ambient light	F4

Application Example:

The calibration performs without any problems if the following illumination is present:

Illumination through a light bulb without reflector (100W, opal) in a distance of 70 cm above the glass ceramic hob.

After a successful calibration the function of the hob is also guaranteed even with strong illumination, for example with halogen spot with reflector (50W).

In case of an error, the calibration is repeated until the ambient conditions allow a successful calibration. The

operation of the hob control is only possible, if the calibration of all sensors were successfully completed. You must remove all objects on the hob during calibration process. Furthermore the ambient light should not be too high during the calibration. In case of the message F2, F2 or F4 the user should switch off all ambient light sources or cover the window for the time of the calibration process after the first connection to the power line. After successful finished calibration process the control tolerates a very high rate of ambient light. During the operation

During the operation of the hob control it is continuously adopting and recalibrating towards the change in the ambient conditions.



The touch control has a sensor which protects against overheating. When responding to this sensor, the relevant burner will be deactivated. For information on explanations or error messages, please see chart.
In the event of the non-stop activation of a button (longer than 10 seconds), the entire control system will be deactivated and a permanent signal will sound.

6 Maintenance and care

General information

Service life of the product will extend and the possibility of problems will decrease if the product is cleaned at regular intervals.

DANGER:
Disconnect the product from mains supply before starting maintenance and cleaning works.
There is the risk of electric shock!

DANGER:
Allow the product to cool down before you clean it.
Hot surfaces may cause burns!

- Clean the product thoroughly after each use. In this way it will be possible to remove cooking residues more easily, thus avoiding these from burning the next time the appliance is used.
- No special cleaning agents are required for cleaning the product. Use warm water with washing liquid, a soft cloth or sponge to clean the product and wipe it with a dry cloth.
- Always ensure any excess liquid is thoroughly wiped off after cleaning and any spillage is immediately wiped dry.
- Do not use cleaning agents that contain acid or chloride to clean the stainless or inox surfaces and the handle. Use a soft cloth with a liquid detergent (not abrasive) to wipe those parts clean, paying attention to sweep in one direction.

The surface might get damaged by some detergents or cleaning materials.
Do not use aggressive detergents, cleaning powders/creams or any sharp objects during cleaning.
Do not use harsh abrasive cleaners or sharp metal scrapers to clean the oven door glass since they can scratch the surface, which may result in shattering of the glass.

Do not use steam cleaners to clean the appliance as this may cause an electric shock.

Cleaning the hob

Glass ceramic surfaces

Wipe the glass ceramic surface using a piece of cloth dampened with cold water in a manner as not to leave any cleaning agent on it. Dry with a soft and dry cloth. Residues may cause damage on the glass ceramic surface when using the hob for the next time.
Dried residues on the glass ceramic surface should under no circumstances be scraped with hook blades, steel wool or similar tools.
Remove calcium stains (yellow stains) by a small amount of lime remover such as vinegar or lemon juice. You can also use suitable commercially available products.
If the surface is heavily soiled, apply the cleaning agent on a sponge and wait until it is absorbed well. Then, clean the surface of the hob with a damp cloth.

Sugar-based foods such as thick cream and syrup must be cleaned promptly without waiting the surface to cool down. Otherwise, glass ceramic surface may be damaged permanently.

Slight color fading may occur on coatings or other surfaces in time. This will not affect operation of the product.
Color fading and stains on the glass ceramic surface is a normal condition, and not a defect.

7 Troubleshooting

Product emits metal noises while heating and cooling.

- When the metal parts are heated, they may expand and cause noise. >>> *This is not a fault.*

Product does not operate.

- The mains fuse is defective or has tripped. >>> *Check fuses in the fuse box. If necessary, replace or reset them.*
- Product is not plugged into the (grounded) socket. >>> *Check the plug connection.*
- If the display does not light up when you switch the hob on again. >>> *Disconnect the appliance at the circuit breaker. Wait 20 seconds and then reconnect it.*



Consult the Authorised Service Agent or technician with licence or the dealer where you have purchased the product if you can not remedy the trouble although you have implemented the instructions in this section. Never attempt to repair a defective product yourself.

Baumatic®

www.baumatic.com.au

