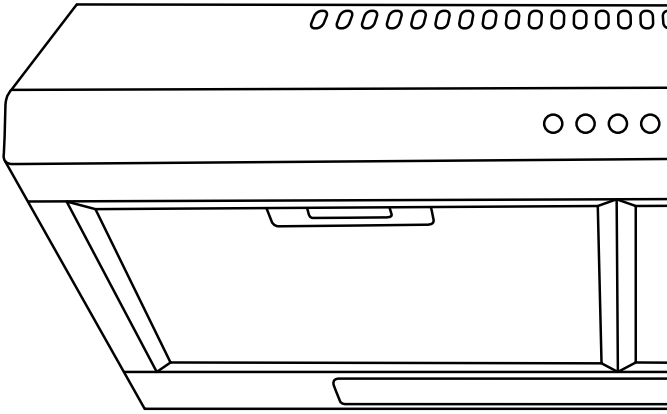

FIXED RANGEHOOD

instruction manual
VF60S & VF90S

24 MONTH WARRANTY

Contents

Guide to the Appliance	2
Caring for the Environment	3
Safety Information and Warnings	4
Installation Instructions	6
Operation Instructions	8
Troubleshooting	9
Care and Maintenance	10
Specifications	12

Guide to the Appliance

VF60S

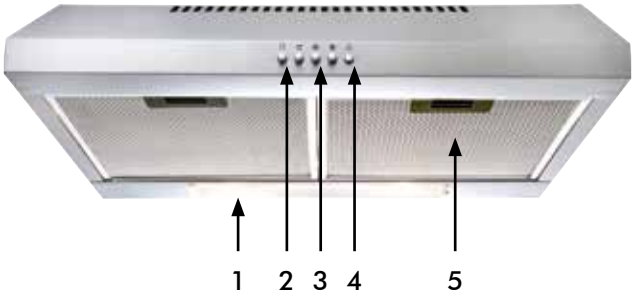

1. LED Lights x 2
2. On/Off button
3. Power buttons: ⎯ (low), ═ (mid), ≡ (high)
4. On/Off light button
5. Aluminium filters x 2

VF90S

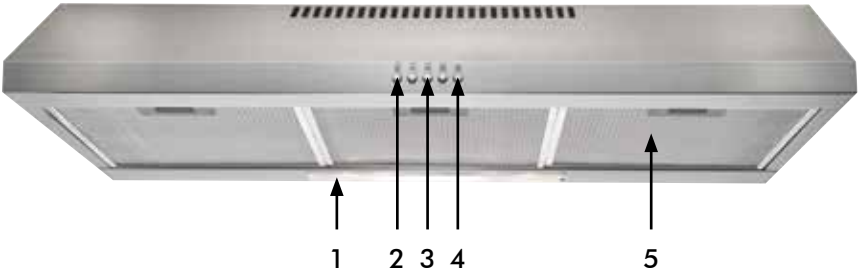

1. LED Lights x 2
2. On/Off button
3. Power buttons: ⎯ (low), ═ (mid), ≡ (high)
4. On/Off light button
5. Aluminium filters x 3

Caring for the Environment

Responsible disposal of the packaging

The packaging of your appliance has been selected from environmentally friendly materials and can usually be recycled. Please ensure these are disposed of correctly.

Plastic wrapping can be a suffocation hazard for babies and young children, please ensure all packaging materials are out of reach and are safely disposed of. Please ensure they are offered for recycling rather than throwing these materials away.

Responsible disposal of the appliance

At the end of its working life, do not throw this appliance out with your household rubbish. An environmentally friendly method of disposal will ensure that valuable raw materials can be recovered and used again.

Electrical and electronic appliances contain materials and substances which, if handled or disposed of incorrectly, could be potentially hazardous on the environment and human health.

Observe any local regulations regarding the disposal of electrical consumer goods and dispose of it appropriately for recycling. Contact your local authorities for advice on recycling facilities in your area.

The plug must be rendered useless and the cable cut off directly behind the appliance or the machine to prevent misuse.

Safety Information and Warnings

General

- Please ensure this manual is read carefully before installation and use. Keep this manual in a safe and accessible location should future reference be required.
- The appliance has been designed as an exhausting version (external exhaust) or as a filter version (inter air recycle) cooker hood.

Safety Precaution

- Take care when the cooker hood is operating simultaneously with an open fireplace or burner that depends on the air from the environment and that are supplied by other than electrical energy, as the cooker hood removes the air from the environment which a burner or fireplace needs for combustion.
- There shall be adequate ventilation of the room when the range hood is used at the same time as appliances burning gas or other fuels. (Not applicable to appliances that only discharge the air back into the room)
- There is a risk of fire if cleaning is not carried out in accordance with the instructions.
- Do not flambé under the range hood.

CAUTION: Accessible parts may become hot when used with a cooking appliance.

- The appliance is not intended for use by persons (including children) with reduced physical, sensory or mental capabilities, or lack of experience and knowledge, unless they have been given supervised or instruction concerning use of the appliance by a responsible person for their safely.
- If the supply cord is damaged, it must be replaced by the manufacturer or its service agent or a similarly qualified person in order to avoid a hazard.
- The negative pressure in the environment must not exceed 4 Pa (4*10-5 bar).
- Provide adequate ventilation in the environment for a safe operation for the cooker hood.
- Follow the local laws applicable for external air evacuation.
- Appliance shall only be used with rated voltage and frequency.
- There is a fire risk if cleaning is not carried out in accordance with the instruction.

Installation Safety Precautions

- The exhaust air must not be discharged into a flue which is used for exhausting fumes from other appliances burning gas or other fuels. (Not applicable for appliances which only discharge air back into the room)
- The minimum distance between the supporting surface for the cooking vessels on the hob and the lowest part of the range hood is to be 65cm.
- When the range hood is located above a gas appliance, this distance may be reduced to 65cm to align with the AGA code.

WARNING: Failure to install the screws or fixing device in accordance with the instructions may result in electrical hazards.

WARNINGS

- In certain circumstances electrical appliances may be a danger hazard.
- Do not check the status of the filters while the cooker hood is operating.
- Do not touch the light bulbs after appliance use.
- Donotdisconnecttheappliancewithwethandsanddonotapplyexcessiveforceto the supply cord.
- Naked Flame cooking (flambe) is prohibited underneath cooker hood (e.g. items such as BBQ's).
- The hood is only to be used in a domestic situation.
- Avoid free flame, as it is damaging for the filters and a fire hazard.
- Constantly check frying food to avoid it becoming overheated as the oil may become a fire hazard.
- Disconnect the electrical plug prior to any maintenance.
- Young children should be supervised to ensure that they do not play with the appliance.

Installation Instructions

Wall Mount Installation:

1. The cooker hoods should be placed at a distance of 65—75cm from the cooking surface for best effect. The minimum distance between the supporting surface for the cooking vessels on the hob and the lowest part of the range hood is to be 65cm. When the range hood is located above a gas appliance, this distance may be reduced to 60cm to align with the AGA code.
2. To install onto the wall, drill 4 holes of Ø 8mm at a suitable place according with the centre distance of hole in the back of the cooker hood.
3. Insert the nut into the holes.
4. Insert the screws (ST4*30) into the nuts and tighten.
5. Put up the cooker hood onto the fixed screws.
6. Then use the attached accessories enclosed to turn the screws into the two holes of inside the hood, and then fix the screws to tighten the hood onto the wall.
7. Put the one way valve onto the cooker hood.

Built-in Installation:

1. Drill 4 holes of Ø 6mm at the bottom of the hanging cupboard.
2. Put the one way valve on the cooker hood, then install the cooker hood on the bottom of the cupboard, tighten the hood with enclosed 4 screws (M4*35).
3. Install the adjusted board on the bottom of the hood in order to keep out the gap between hood back and cupboard.

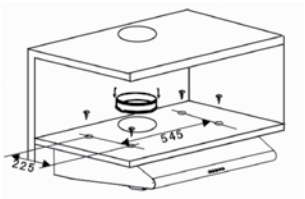

60cm hood

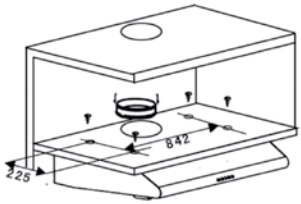

90cm hood

NOTICE:

There are 2 methods for ventilation, including 'horizontal ventilation' and 'vertical ventilation'. Please pay attention to the ventilation method when installing.

1. Horizontal ventilation: As pic. A shown, please use the cover to seal the outlet on the top, then the air can be vented from back.
2. Vertical ventilation: As pic. B shown, please use the cover to seal the outlet on the back, then the air can be vented from top.

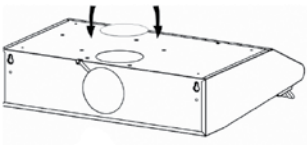

A

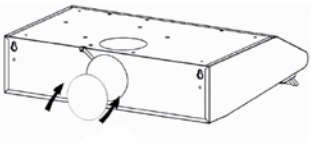

B

Operation Instructions

1. Outdoor air ventilation: Turn the adjuster to outdoor position (pic. A), install the outlet, turn on the cooker hood, then the air will be vented from the outside outlet.
2. Indoor air ventilation: Turn the adjuster to indoor position (pic. B), install the outlet cover, turn on the cooker hood, then the air can be vented from the inside outlet.

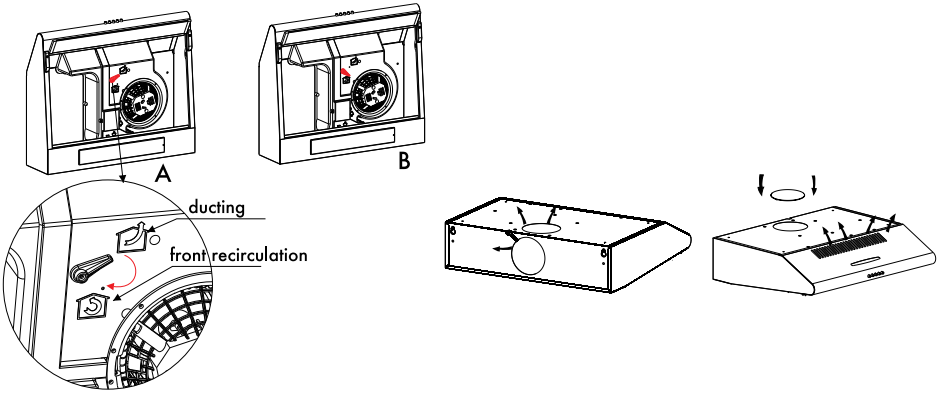

When you choose “front re-circulation mode”, the charcoal filter must be installed.

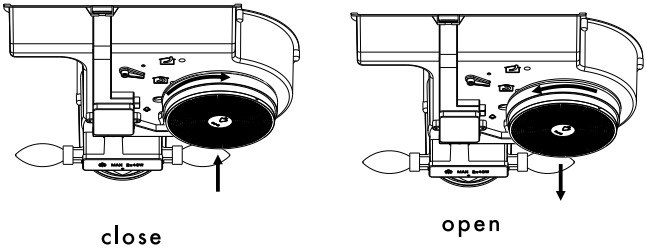

1. Push stop button, and the motor will stop.
2. Push the Low button, the motor runs at low speed.
3. Push the Mid button, the motor runs at mid speed.
4. Push the High button, the motor runs at high speed.
5. Push the light button and the two lights will come on. Push it again and the lights will turn off.

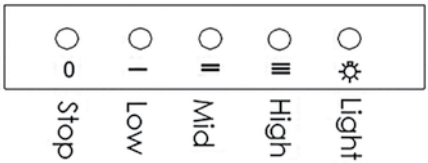

Troubleshooting

Fault	Cause	Solution
Light on, but motor does not work	Blocked Fan Blades	Remove item caught in fan blades
	Faulty capacitor	Replace capacitor*
	The motor jammed bearing damaged	Replace motor*
	The internal with of motor off or a bad smell from the motor	Replace motor*
Light does not work, motor does not work	Light/s damaged	Replace lights
	Power cord loose	Ensure pushed into power points fully
Hood Vibrating	Fan blades damaged and causes vibration	Replace fan blades
	The motor is not tightly fastened	Lock the motor tightly
	The body is not tightly hanged	Tighten the motor
Insufficient suction	The distance between the hood and the cooktop is incorrect (too far)	Readjust the distance
	Too much air movement from open doors or windows	During use ensure reasonable ventilation provided although not strong winds
The machine inclines	The fixing screw or hanging screws are not tight enough	Tighten the screw and make it horizontal

* This work to be handled only by a qualified tradesperson

Care and Maintenance

NOTE: Please ensure this rangehood is turned off at the power point before any care and maintenance is carried out.

- It is recommended to commence the operation of the appliance prior to cooking.
- It is recommended to leave the appliance in operation for 15 minutes after cooking is terminated in order to completely eliminate cooking vapours and odours.
- When the appliance is not in use, please turn off.
- Do not use if the appliance is damaged — especially the supply cord and the case.
- If the supply cord is damaged, it must be replaced by the manufacturer, its service agent or similarly qualified persons in order to avoid a hazard.
- Do not immerse the appliance in liquid.
- The exhaust air must not be discharged into a flue which is used for exhausting fumes from an appliance burning gas or other fuels.
- Regulations concerning the discharge of air have to be fulfilled.
- The proper function of the cooker hood is conditioned by the regularity of the maintenance operations, in particular, the active carbon filter.
- The filters are designed to capture the grease particles suspended in the air from the cooking process, and must be maintained as per below to avoid clogging (depending on the frequency of the use of the appliance).
  - In order to prevent a fire hazard, it is recommended to clean the filter at least every 2 months by carrying out the following:
    - Remove the filters from the cooker hood and wash them in a solution of water and neutral liquid detergent, leaving to soak.
    - Rinse thoroughly with warm water and leave to dry.
    - The filters may also be washed in the dishwasher.
- The aluminum panels may alter in color after several washes. This is normal under correct use and is not cause for customer concern or replacement of panels.
- Clean the fan and other surface of the cooker hood regularly using cloth moistened with denatured alcohol of non abrasive liquid detergent.
- Before any repair on the cooker hood, detach all plugs.
- Replace carbon filters approximately every 4 months.

Care and Maintenance

IMPORTANT: To disassemble and assemble the filter, please refer to the below picture.

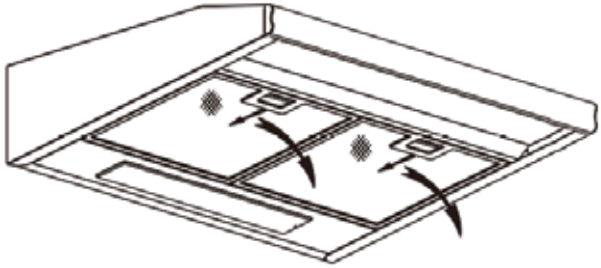

IMPORTANT: To change the light, press the lamp cup, take out the bulb counter-clockwise.

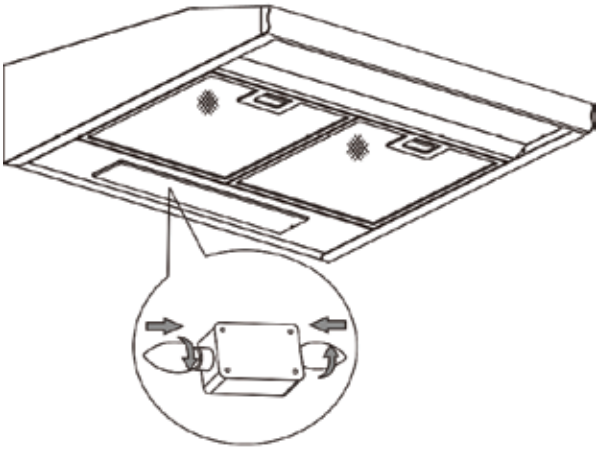

IMPORTANT: Should the lamps not work, make sure they are firmly tightened.

Specifications

VF60S

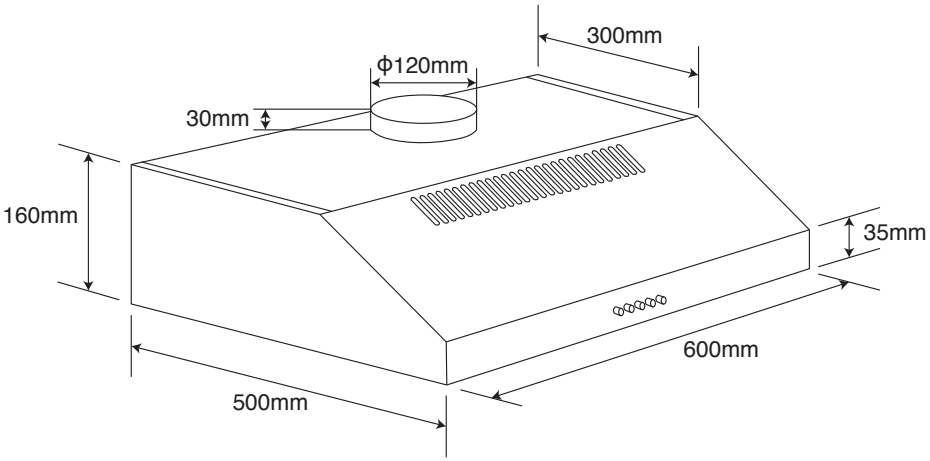

Features

Fixed stainless steel 60cm rangehood

3 Speed push button

250m³/h

LED Lights – 2 x 2W

2 x Aluminium filters

Ducted - recirculating available

53 dB(A) on maximum

Optional Accessories

Carbon Filter (CF110)

Technical Information

220-240V/50Hz

104W

1.5metre cable

120mm ducting spigot

Product Dimensions

160 mm H x 600mm W x 500mm D

Specifications

VF90S

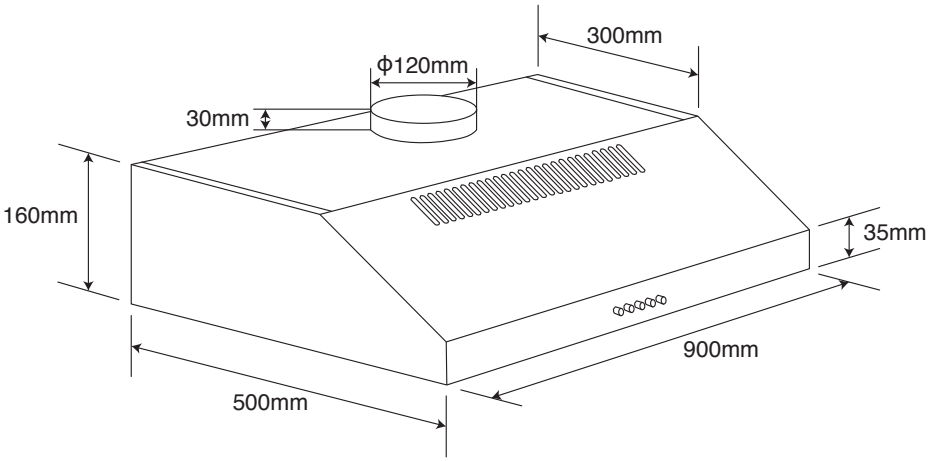

Features

Fixed stainless steel 90cm rangehood

3 Speed push button

250m³/h

LED Lights – 2 x 2W

3 x Aluminium filters

Ducted - recirculating available

53 dB(A) on maximum

Optional Accessories

Carbon Filter (CF110)

Technical Information

220-240V/50Hz

104W

1.5metre cable

120mm ducting spigot

Product Dimensions

160mm H x 900mm W x 500mm D

Blank Page

Distributed by:
Home Appliances Pty. Ltd.
20 Carlotta Street, Artarmon NSW 2064
After sales support: 1800 444 357
Fax: 1300 133 279
Email: info@hapl.com.au

VIALIPRODUCTS.COM.AU

While every effort has been made in the preparation of this instruction manual, the publishers cannot be held responsible for the accuracy of the information contained herein or any consequences arising from it.