Dishwasher

Instruction Manual

Baumatic

Please read this user manual first!

Dear Customer,

We hope that you get the best results from the product which has been manufactured in state-of-the-art plants and passed through a strict quality control procedure.

Therefore, please read the entire user manual carefully before using the product and keep it as a reference for future use. In case of transferring the product to someone else, give the manual as well.

The user manual will help you use your product in a fast and safe way.

• Read the user manual before installing and starting your product.
• Always follow the safety instructions.
• Keep this user manual within easy reach for future reference.
• Read also the other documents supplied with the product.

Remember that this user manual is also applicable for several other models. Differences between models will be identified in the manual.

Explanation of symbols

Throughout this User Manual the following symbols are used:

ⓘ Important information or useful hints about usage

⚠ Warning for hazardous situations with regard to life and property

⚠ Warning for electric shock

CONTENTS

1. Dishwasher 3

2. Important safety instructions 5

General safety 5
Intended use 5
Children's safety 6

3. Installation 7

Appropriate installation location 7
Connecting water supply 7
Connection to the drain 8
Adjusting the feet 9
Aquasafe+ 9
Electrical connection 9
Initial use 9
Disposing of packaging material 10
Transportation of the product 10
Disposing of the old product 10

4. Prewashing 11

Tips for energy saving 11
Detergent 11
Adding detergent 11
Rinse aid 12
Silverware basket 15
Silverware basket piece 15
Movable silverware basket 15
Collapsible lower basket wires (2 pieces) 16
Collapsible lower basket wires (4 pieces) 16
Collapsible lower basket wires (6 pieces) 17
Collapsible lower basket wires (4 & 8 pieces) 18
Lower basket multipurpose / height adjustable service rack 19
Lower basket bottle wire 20
Upper basket height adjustable rack 20
Upper basket drawer 20
Upper basket glass support piece 21
Collapsible upper basket wires 21
Collapsible upper basket wires 22
Adjusting the height of loaded upper basket 23
Adjusting the height of loaded upper basket 24
Adjusting the height of empty upper basket 25
Ceiling silverware basket 26

5. Maintenance and cleaning 27

Cleaning the outer surface of the product 27
Cleaning the interior of the machine 27
Cleaning the filters 27
Cleaning the hose filter 28
Cleaning the impellers 28

6. Troubleshooting 30

1 Dishwasher

Overview

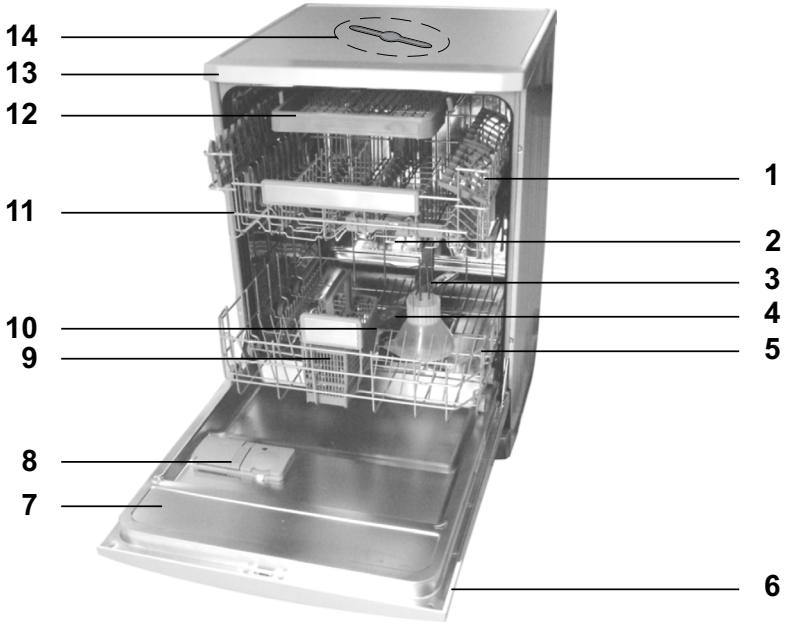

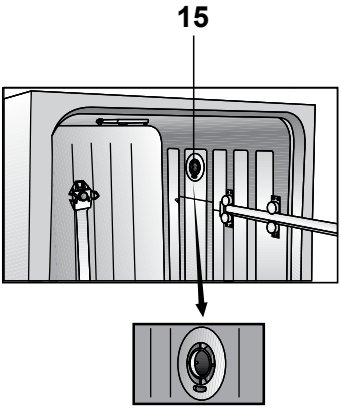

1.Tabletop (depends on the model)
2.Upper impeller
3.Lower basket
4.Lower impeller
5.Filters
6.Control panel
7.Door
8.Detergent dispenser
9.Lower impeller slot
10. Silverware basket
11. Upper basket rail
12. Upper basket with rack
13. Fan drying system (depends on the model)

Technical specifications

This product complies with the following EU directives:
Development, production and sales stages of this product comply with the safety rules included in all pertaining European Community regulations.
2006/95/EC, 2004/108/EC, 93/68/EC

Capacity	14 standard place settings
Power input	220-240 V, 50 Hz
Total power consumption	1800-2100 W
Heater power consumption	1800 W
Total current	10 A
Drain pump power consumption	30 W
Water pressure	0.3 –10 bar (= 3 – 100 N/cm² = 0.03-1.0 Mpa)

- Technical specifications may be changed without prior notice to improve the quality of the product.
- Figures in this manual are schematic and may not match the product exactly.
- Values stated on the product labels or in the documentation accompanying it are obtained in laboratory conditions in accordance with the relevant standards. Depending on operational and environmental conditions of the product, these values may vary.

Note for test institutions:
Data required for performance tests shall be provided upon request. Requests can be e-mailed to the following address:

dishwasher@standardloading.com

Do not forget to provide the code, stock and serial numbers of the product to be tested in your request e-mail along with your contact information. Code, stock and serial numbers of the product is located on the type label attached to the side of the door.

2 Important safety instructions

This section contains safety instructions that will help to get protected from risk of personal injury or property damage Failure to follow these instructions shall void all warranties.

General safety

- Never place the product on a carpet-covered floor; otherwise, lack of airflow beneath the product will cause electrical parts to overheat. This will cause problems with your product.
- Do not operate the product if the power cable / plug is damaged! Call the Authorised Service Agent.
- Connect the product to a grounded outlet protected by a fuse complying with the values in the “Technical specifications” table. Do not neglect to have the grounding installation made by a qualified electrician. Manufacturer shall not be liable for any damages that will arise when the product is used without grounding in accordance with the local regulations.
- The water supply and draining hoses must be securely fastened and remain undamaged.
- Unplug the product when not in use.
- Never wash the product by spreading or pouring water onto it! There is the risk of electric shock!
- Never touch the plug with wet hands! Never unplug by pulling on the cable, always pull out by grabbing the plug.
- The product must be unplugged during installation, maintenance, cleaning and repairing procedures.
- Always have the installation and repairing procedures carried out by the Authorised Service Agent. Manufacturer shall not be held liable for damages that may arise from procedures carried out by unauthorised persons.
- Never use chemical solvents in the product. They bring forth risk of explosion.
- When you pull the upper and lower baskets out completely, the door of the product will bear all the weight of the baskets. Do not put other loads on the door; otherwise, the product may tilt.
- Never leave the door of the product open apart from loading and unloading procedures.
- Do not to open the door of the product when it is running unless necessary. Be careful for the rush of hot vapour when you need to open the door.

Intended use

This appliance is intended to be used in household and similar applications such as:

- staff kitchen areas in shops, offices and other working environments;
- farmhouses;
- by clients in hotels, motels and other residential type environments;
- bed and breakfast type environments.It must be used to do the domestic type dishes only.

- Only dishwasher safe detergents, rinse aids and additives must be used.
- The manufacturer waives any responsibility arisen from incorrect usage or transportation.
- The service life of your product is 10 years. During this period, original spare parts will be available to operate the appliance properly.
- This product should not be used by persons with physical, sensory or mental disorders or unlearned or inexperienced people (including children) unless they are attended by a person who will be responsible for their safety or who will instruct them accordingly for use of the product.

Children's safety

- Electrical products are dangerous for the children. Keep children away from the product when it is in use. Do not let them to tamper with the product.
- Do not forget to close the door of the product when leaving the room where it is located.

⚠ Dishwasher detergents are strongly alkaline. They can be extremely dangerous if swallowed. Avoid contact with the skin and eyes and keep children away from the dishwasher when the door is open. Check that the detergent receptacle is empty after completion of the wash cycle.

Store all detergents and additives in a safe place away from the reach of the children.

3 Installation

Refer to the nearest Authorised Service Agent for installation of your product. To make the product ready for use, make sure that the electricity, tap water supply and water drainage systems are appropriate before calling the Authorised Service Agent. If they are not, call a qualified technician and plumber to have any necessary arrangements carried out.

ⓘ Preparation of the location and electrical, tap water and waste water installations at the place of installation is under customer's responsibility.

⚠ Installation and electrical connections must be carried out by the Authorised Service Agent. Manufacturer shall not be held liable for damages that may arise from procedures carried out by unauthorised persons.

⚠ Prior to installation, visually check if the product has any defects on it. If so, do not have it installed. Damaged products cause risks for your safety.

⚠ Make sure that the water inlet and discharge hoses are not folded, pinched or crushed while pushing the product into its place after installation or cleaning procedures.

When placing the product, pay attention not to damage the floor, walls, piping, etc. Do not hold the product from its door or panel to move it.

Appropriate installation location

- Place the product on a solid and flat floor that has sufficient load carrying capacity! The product must be installed on a flat surface in order for the door to be closed comfortably and securely.
- Do not install the product at places where temperature may fall below 0ºC.
- Place the product at least 1 cm away from the edges of other furniture.
- Place the product on a rigid floor. Do not place it on a long pile rug or similar surfaces.

⚠ Do not place the product on the power cable.

- Make sure that you select a location that will allow you to load and unload the dishes in a fast and comfortable manner.
- Install the product in a place close to the tap and the drain hole. Select the installation location by considering that it will not be changed after the connections are made.

Connecting water supply

⚠ Not recommended to run with hot water.

ⓘ We recommend attaching a filter on the house/apartment supply water inlet to protect the machine from damages that may arise from impurities (sand, dirt, rust, etc.) coming from the urban water supply system or from your own water system as well as to prevent complaints such as yellowing or sludge accumulation at the end of washing.

The incoming water temperature should not exceed 60°C.

⚠ If you plan to connect your machine to natural energy resources or to the central hot water supply, first check out the temperature values written on your water inlet hose to make sure that it is suitable for such usage. If your hose is not suitable, apply to your Authorised Service Agent to have it changed.

- Do not use old or used water inlet hose on the new product. Use the new water inlet hose supplied with the product.
- Connect the water inlet hose directly to the water tap. Pressure coming from the tap should be minimum 0.3 and maximum 10 bars. If the water pressure exceeds 10 bars, a pressure relief valve should be installed in between.

ⓘ Use a screw-on hose connector to connect the water inlet hose to a water tap with a ¾ inch external thread. If required, use a filter insert to filter deposits from the pipes.

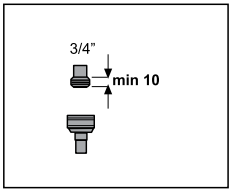

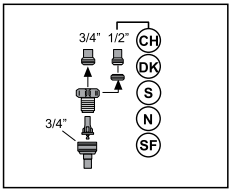

- Open the taps completely after making the connections to check for water leaks.

⚠ For your safety, close the water inlet tap completely after the washing programme is over.

Connection to the drain

Water discharge hose can directly be connected to the drain hole or sink's drainage. The length of this connection must be min. 50 cm and max. 100 cm from the floor.

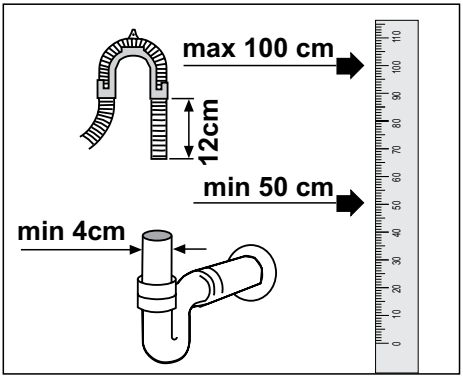

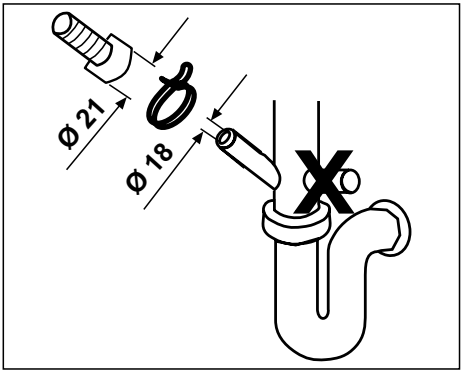

A discharge hose longer than 4 meters causes dirty washing.
Attach the water discharge hose to the drainpipe without bending it.
Tightly fix the water discharge hose to the drainpipe in order to prevent any dislocation of the water discharge hose during operation of the product.

ⓘ Drainpipe must be connected to the sewage system and it should not be connected to any surface water.

Adjusting the feet

If the door of the product cannot be closed properly or if the product swings when you push it slightly, then you need to adjust the feet of the product. Adjust the feet of the product as illustrated in the installation manual supplied with the product.

Aquasafe+

(depends on the model)

Protect the Aquasafe+ system against water leaks that may occur at hose inlet. Water contact with the valve box of the system must be prevented. Otherwise, electrical assembly will get damaged. If the Aquasafe system is damaged, unplug the product and call the Authorised Service Agent.

⚠ As the hose set contains electrical connections and assemblies, never shorten or lengthen the hose with extension hoses.

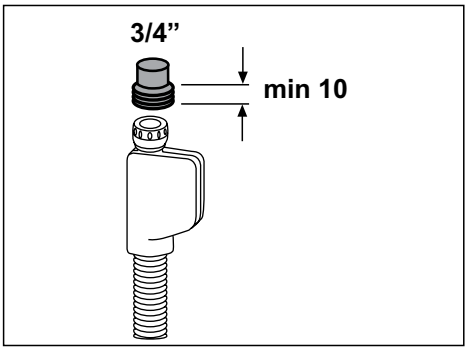

Electrical connection

Connect the product to a grounded outlet protected by a fuse complying with the values in the “Technical specifications” table. Manufacturer shall not be liable for any damages that will arise when the product is used without grounding in accordance with the local regulations.

- Connection must comply with national regulations.
- Power cable plug must be within easy reach after installation.

⚠ Unplug the product after the washing programme is over.

- The voltage and allowed fuse or breaker protection are specified in the “Technical specifications” section. If the current value of the fuse or breaker in the house is less than 16 Amps, have a qualified electrician install a 16 Amp fuse.
- The specified voltage must be equal to your mains voltage.
- Do not make connections via extension cables or multi-plugs.

⚠ Damaged power cables must be replaced by the Authorised Service Agent.

⚠ If the product has a failure, it should not be operated unless it is repaired by the Authorised Service Agent! There is the risk of electric shock!

Initial use

Before starting to use the product, make sure that all preparations are made in accordance with the instructions in sections “Important safety instructions” and “Installation”.

- To prepare the product to do the dishes, perform first operation in the shortest programme with

detergent while the machine is empty.

ⓘ Some water might have remained in the product due to the quality control processes in the production. It is not harmful for the product.

Disposing of packaging material

Packaging materials are dangerous to children. Keep packaging materials in a safe place away from reach of the children.

Packaging materials of the product are manufactured from recyclable materials. Dispose of them properly and sort in accordance with recycled waste instructions. Do not dispose of them with normal domestic waste.

Transportation of the product

⚠ If you need to move the product, do it in upright position and hold from the rear side. Slanting the product onto its front side may cause the electronic parts in it get wet and damaged.

1. Unplug the product before transporting it.
2. Remove water drainage and water supply connections.
3. Drain the remaining water in the product completely.

Disposing of the old product

Dispose of the old product in an environmentally friendly manner.

Some parts of the product are manufactured from recyclable materials. Along with a recycling symbol, information about its nature (PE, PS, POM, etc) is also provided on the material. These materials should not be disposed as normal domestic wastes.

Refer to your local dealer or solid waste collection centre in your area to learn how to dispose of your product.

⚠ For children's safety, cut the power cable and break the locking mechanism of the door so that it will be non-functional before disposing of the product.

4 Prewashing

Tips for energy saving

Following information will help you use the product in an ecological and energy-efficient manner.

- Wipe away any coarse food remnants on the dishes before putting them in the product.
- Operate the product after filling it completely.
- When selecting a programme, refer to the “Programme Table”.
- Do not put more detergent than suggested on the detergent package.

Detergent

You can use powder or tablet detergent in the machine.

ⓘ Only use in the machine the detergents produced particularly for use with dishwashers. We recommend you not to use detergents that contain chlorine and phosphate as they are harmful for the environment.

ⓘ Contact the detergent producer if the dishes are wet and/or if you notice limescale spots particularly on glasses after the washing programme is over.

Adding detergent

ⓘ Refer to the “Programme Table” to determine the correct amount of detergent for the selected programme.

⚠ Do not put solvents into the detergent dispenser. There is the risk of explosion!

Put the detergent into the detergent dispenser just before operating the machine as illustrated below.

1. Push the latch to right to open the detergent dispenser lid (A).

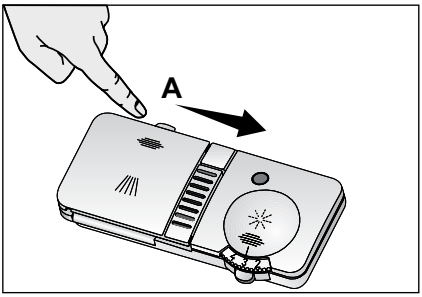

2. Put suggested amount of powder or tablet detergent in the dispenser.

ⓘ Inside the detergent dispenser, there are level markings that help you use appropriate amount of detergent. When brimful, detergent dispenser will contain 40 cm³ of detergent. Fill detergent up to 15 cm³ or 25 cm³ level marks in the detergent dispenser according to fullness of the machine and/or soiling degree of the dishes (1).

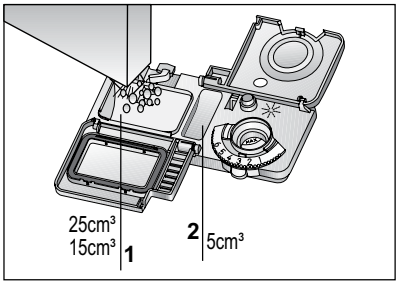

ⓘ If dishes have been waiting for a long time and have dried residues, fill the 5 cm³ compartment too (5).

3. Close the detergent dispenser lid by pressing on it lightly. A “click” will be heard when the lid is closed.

ⓘ In programmes with prewash and at high temperature, in which you use tablet detergents, make sure that the detergent dispenser lid is closed firmly.

ⓘ Use powder detergent in short programmes without prewash since the solubility of the tablet detergent changes depending on the temperature and time.

⚠ Excessive usage of powder detergents will cause the detergent not dissolve completely and will also cause scratches on the glassware.

Rinse aid

ⓘ The rinse aid used in dishwashers is a special combination used to increase drying efficiency and prevent water or limescale stains on the washed items. For this reason, care must be paid to have rinse aid in the rinse aid reservoir and to use rinse aids produced specially for dishwashers only.

Check Rinse Aid Indicator to determine whether it is necessary to add rinse aid or not (3). Having a dark light on the indicator shows that there is sufficient amount of rinse aid in the dispenser. If the colour of the indicator is light, add rinse aid.

1. Open the lid of the rinse aid reservoir by pressing its latch (B).

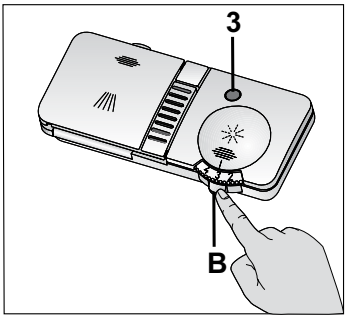

2. Fill the reservoir until “MAX” level.
3. Close the lid of the reservoir by pressing on it lightly.

ⓘ Wipe clean any spilled rinse aid outside the reservoir. Rinse aid that spilled accidentally will cause foaming and it will eventually decrease washing performance.

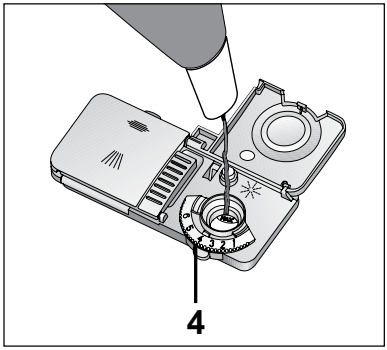

4. Turn the rinse aid amount adjuster manually to a position between 1 and 6 (4). If there are stains on tableware items after washing, level must be increased and if there is a blue trace after wiping them by hand, it must be decreased. This is set to position 4 as factory default.

Items not suitable for washing in the dishwasher

- Never wash dishes soiled by cigarette ash, candle remnants, polish, dyestuff, chemicals, etc. in your dishwasher.
- Do not wash iron alloy items in the dishwasher. It can get corroded or leave stains on other items.
- Do not wash silverware and cutlery with wooden or bone stems, glued pieces, or pieces that are not resistant to heat, as well as copper and tin-plated containers in the dishwasher.

ⓘ Decorative prints of chinaware as well as aluminum and silver items may get discoloured or tarnished after washing in the dishwasher just as it happens in handwashing as well. Some delicate glass types and crystals may become dull in time. We strongly recommend you to check if the tableware you are going to purchase is suitable for washing especially in the dishwasher.

Placing the dishes into the dishwasher

You can use your dishwasher in the optimum way with respect to energy consumption and washing and drying performance only if you place the dishes in an orderly way.

- Wipe away any coarse food remnants (bones, seeds, etc.) on the dishes before placing them in the dishwasher.
- Place thin, narrow pieces in the middle sections of baskets if possible.
- There are two separate baskets in which you can place your dishes in the dishwasher. Place the heavily soiled and bigger items in the lower basket and smaller, delicate and light items in the upper basket.
- Place the hollowed dishes such as bowls, glasses and pans upside down in the dishwasher. Thus, accumulation of water in deep hollows is prevented.

⚠ To prevent possible injuries, always place the sharp and pointed dishes such as service fork, bread knife, etc. upside down so as their pointed ends will face down or they will lie horizontally on the dish baskets.

- Unload dishes in the lower basket first and then the dishes in the upper basket.

Suggestions for loading the dishwasher

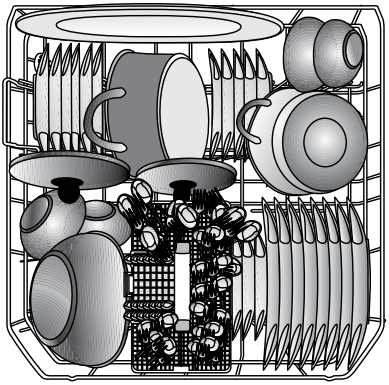

Lower basket

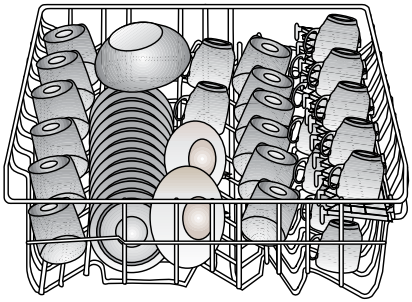

Upper basket

Improper Loading Of Dishware

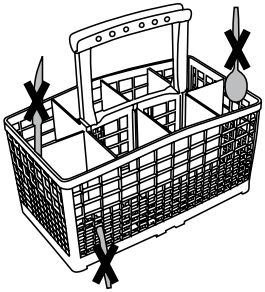

Improper Loading Of Dishware

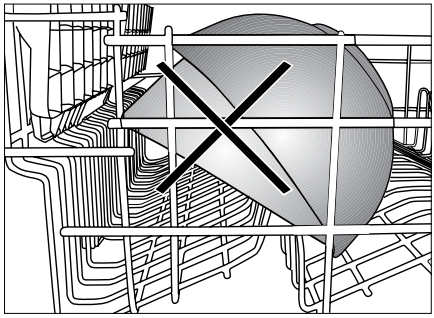

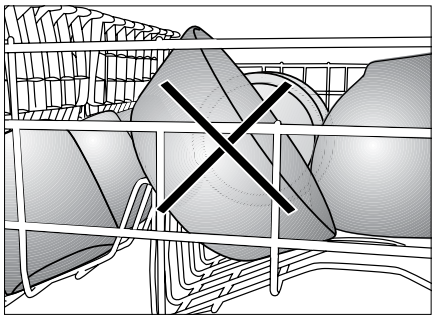

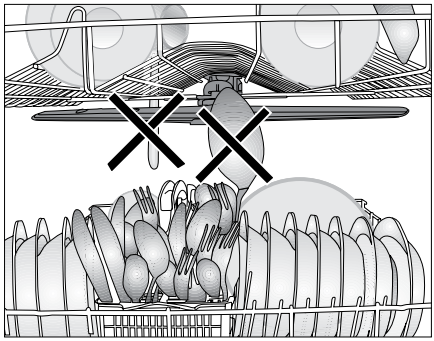

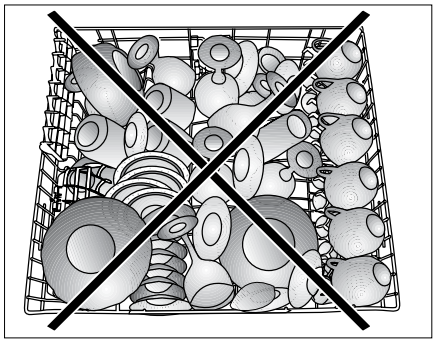

Silverware basket
(depends on the model)
Silverware basket is designed to wash your dishes such as fork, spoon and etc. in a cleaner manner.

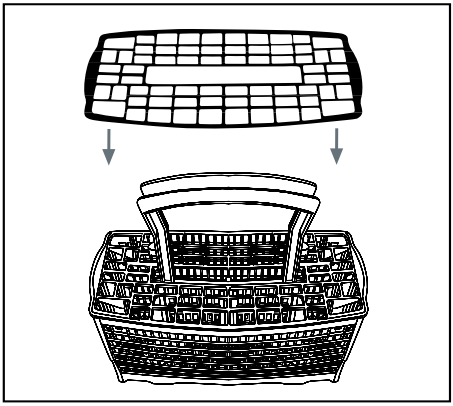

Silverware basket piece
(depends on the model)
You can place your forks, spoons and etc. to upper basket with the additional piece in the figure.

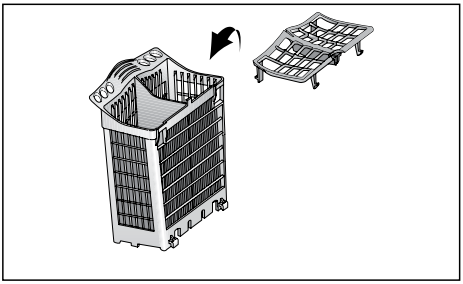

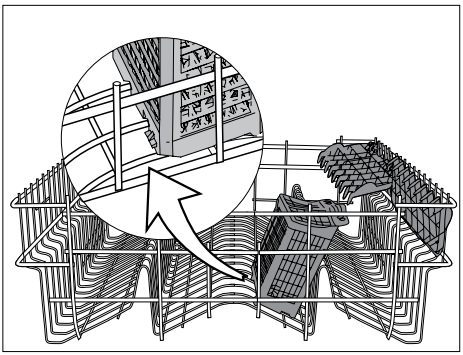

Movable silverware basket
(depends on the model)
Since the cutlery basket can be moved (A, B), you can create a wider space while placing your dishes to the lower basket and free up space for your dishes in different sizes.

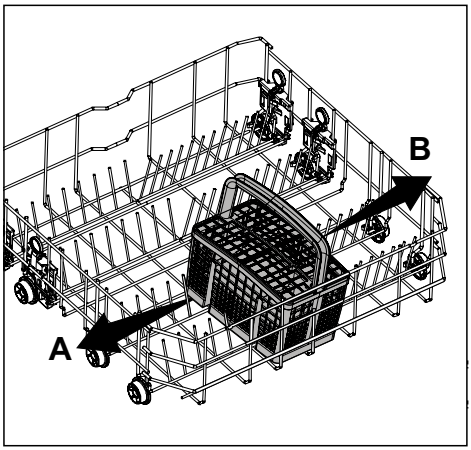

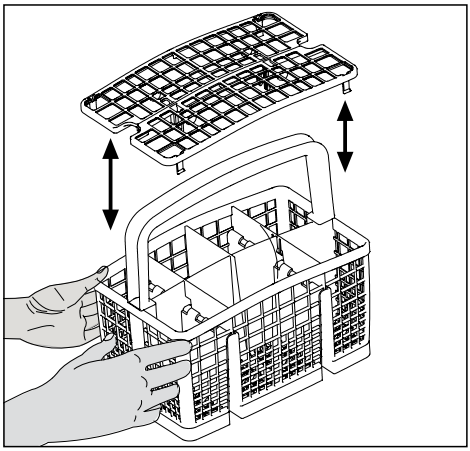

Collapsible lower basket wires (2 pieces)

(depends on the model)

The two piece foldable wires located at the lower basket of the machine are designed for an easier placement of large pieces such as pans, bowls, etc. (1, 2).

You can create larger spaces by folding each wire individually or all of them at once. Lay the foldable wires down by pressing on the latch (A).

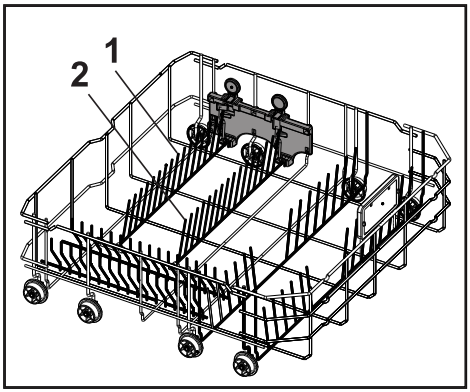

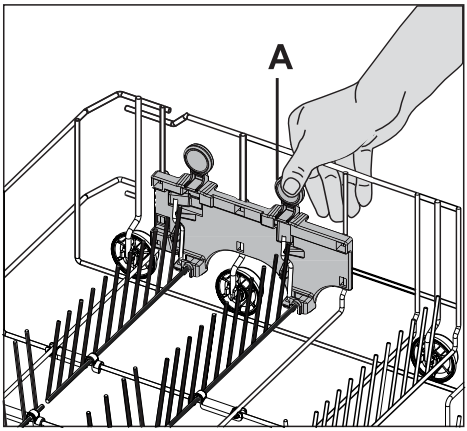

Collapsible lower basket wires (4 pieces)

(depends on the model)

The four piece foldable wires located at the lower basket of the machine are designed for an easier placement of large pieces such as pans, bowls, etc. (1, 2, 3, 4). You can create larger spaces by folding each wire individually or all of them at once. Lay the foldable wires down by pressing on the latch (A).

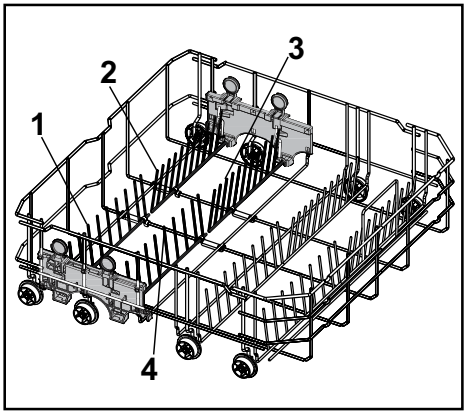

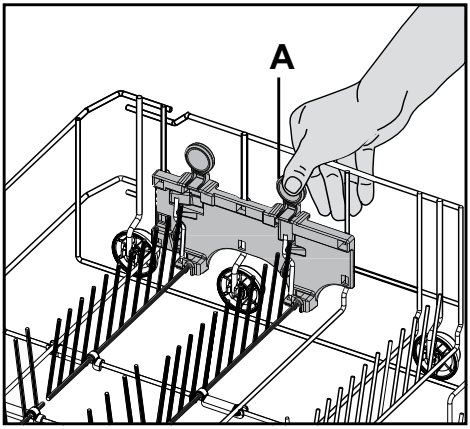

Collapsible lower basket wires (6 pieces)

(depends on the model)

The foldable wires (A) located at the lower basket of the machine are designed for an easier placement of large pieces such as pans, bowls, etc. You can create larger spaces by folding each wire individually or all them at once.

To bring the collapsible wires into horizontal position, grab the wire from mid position and push them in the directions of arrows (B) To bring the wires back to vertical position, just lift them up. Collapsible wires will click into the latch again.

ⓘ Bringing the wires to the horizontal position byholding them from the tips may cause them to bend. Therefore, it will be appropriate to bring the wires in the middle to horizontal or vertical position by holding them from their stems and pishing in the direction of arrow.

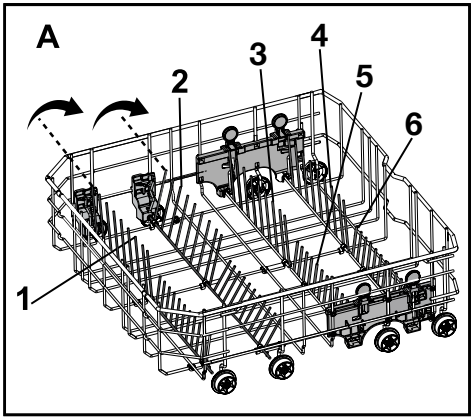

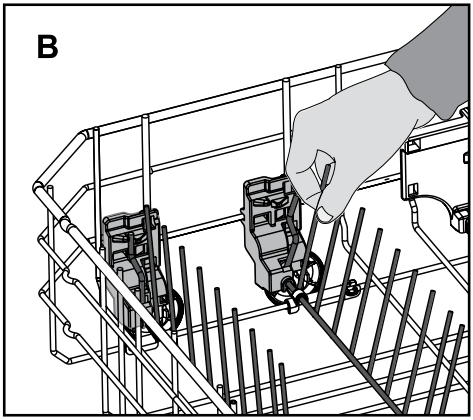

Collapsible lower basket wires (4 & 8 pieces)

(depends on the model)

The foldable wires (A) located at the lower basket of the machine are designed for an easier placement of large pieces such as pans, bowls, etc. You can create larger spaces by folding each wire individually or all them at once.

To bring the collapsible wires into horizontal position, grab the wire from mid position and push them in the directions of arrows (B) To bring the wires back to vertical position, just lift them up. Collapsible wires will click into the latch again (C).

ⓘ Bringing the wires to the horizontal position byholding them from the tips may cause them to bend. Therefore, it will be appropriate to bring the wires in the middle to horizontal or vertical position by holding them from their stems and pishing in the direction of arrow.

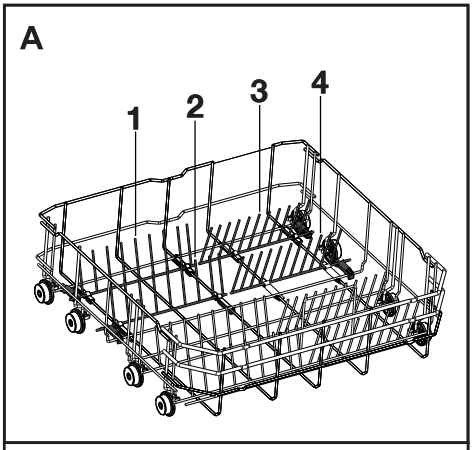

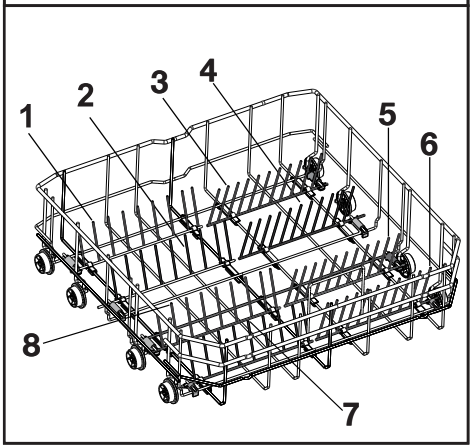

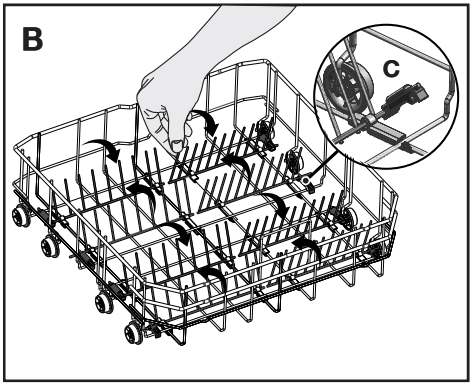

Lower basket multipurpose / height adjustable service rack
(depends on the model)

This accessory located at the lower basket of the machine allows you to easily wash pieces such as extra glasses, long ladles and bread knives.

To close the racks:

1. Fold the rack (A).
2. Slide the rack up (B).
3. Put the rack in vertical position (C).
4. Slide the rack down and lock it with the tabs (D).

ⓘ Perform the same process in reverse order to open the racks.

To adjust the height of the racks:

1. Fold the rack (E).
2. Slide the rack up (F).
3. Open the rack at the desired level (G).

⚠ Make sure that the impeller does not touch the dishes you placed on the racks.

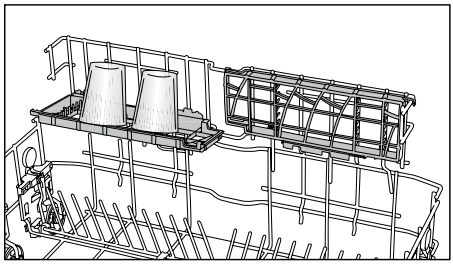

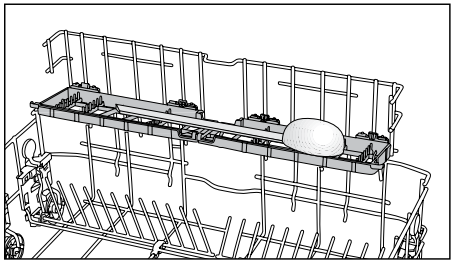

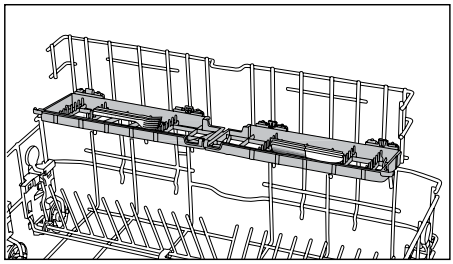

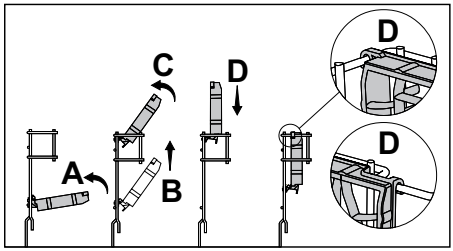

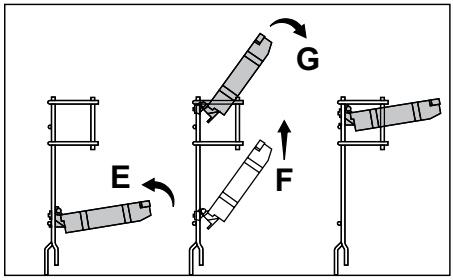

Lower basket bottle wire
(depends on the model)

The bottle wire is designed for easier washing of long pieces with wide mouths. You may take out the bottle wire from the basket when not in use by pulling it out from both sides (H).

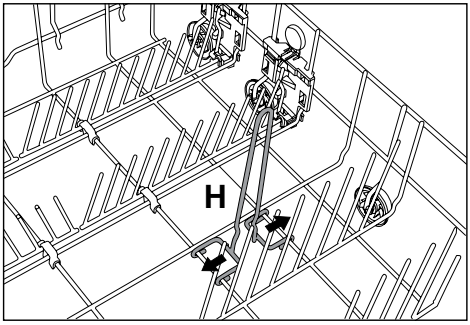

Upper basket height adjustable rack
(depends on the model)

Use the lower and upper parts of the height adjustable racks in the upper basket of the machine by sliding them down or up according to the heights of the glasses, cups or etc. (A, B, C).

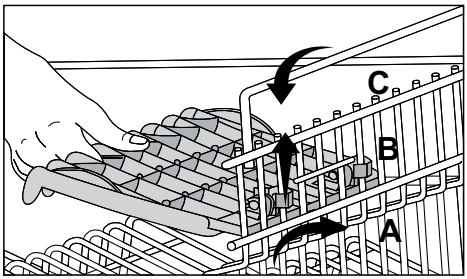

Upper basket drawer
(depends on the model)

You can easily place additional desert spoons, small forks and knives into the basket drawer installed to the upper basket of your machine.

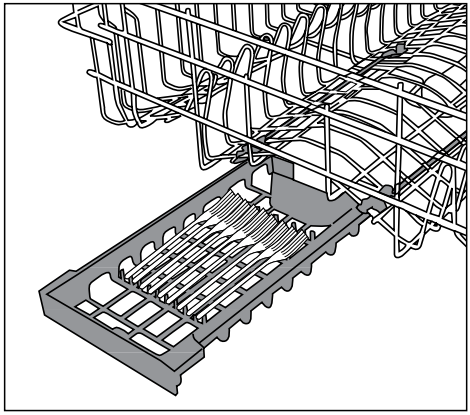

Upper basket glass support piece

(depends on the model)

When placing long stemmed glasses or wine glasses, do not lean them against other pieces but to the edge of the basket or to the rack (1). Do not lean long glasses against each other. They can move and get damaged during washing.

If you wish to place large-volume pieces on the upper basket, release the tab of the glass support piece from the upper basket wire it is hooked to. Thus, you can obtain a wider space.

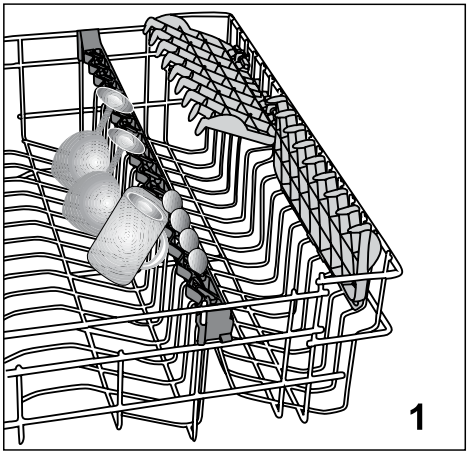

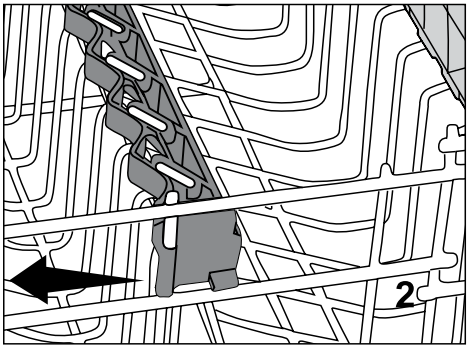

Collapsible upper basket wires

(depends on the model)

To bring the collapsable wires on the upper basket of the machine into horizontal position, press on the latch (1). Place your larger dishes into the area created (2). To bring the wires back to vertical position, just lift them up.

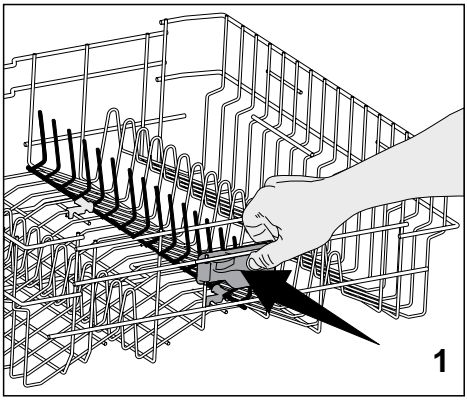

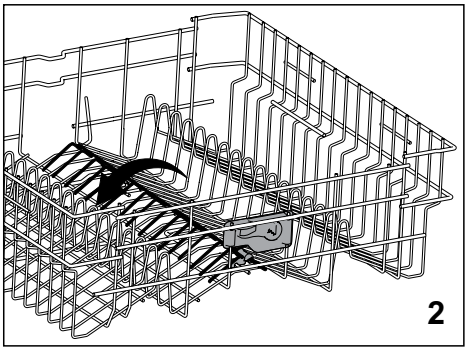

Collapsible upper basket wires

(depends on the model)

There are collapsible wires on the upper basket of the machine that you can lay down when you need a larger room for big dishes.

On your upper basket there are two types of collapsible wires namely, fully laid system (A) and gradually laid system (B). To bring the collapsible wires into horizontal position, push the wires in the direction of the arrow by holding them from the middle. You can place your larger dishes into the area created. To bring the wires back to vertical position, just lift them up. Collapsible wires will click into the latch again.

ⓘ Holding the wires from ends to put them in lying position may cause the wires to bend. For this reason, it will be appropriate to hold the wires in the middle from their bottoms and to push in the direciton of the arrow to lay down or bring them to vertical position.

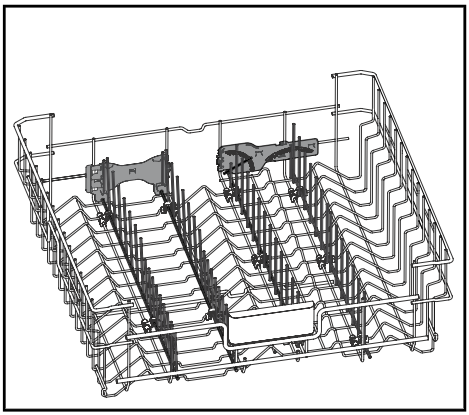

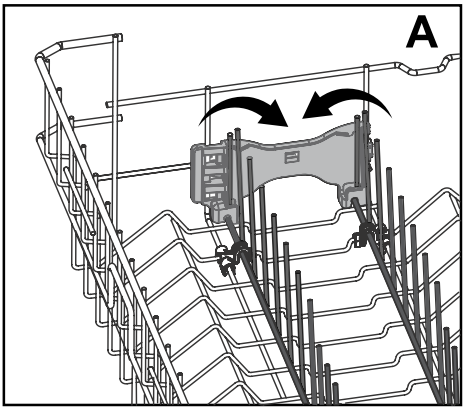

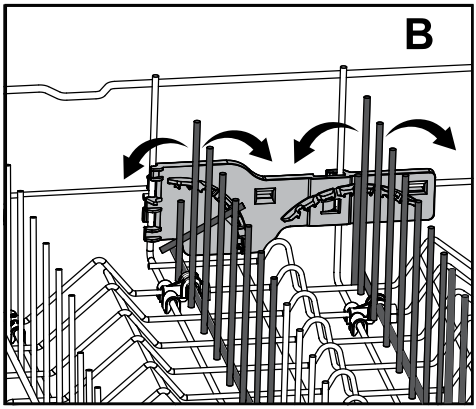

Adjusting the height of loaded upper basket

(depends on the model)

Basket adjustment mechanism on the upper basket of the machine is designed to allow you create wider areas in the upper or lover section of the machine based on your requirements by adjusting the height of the loaded basket in up or down directions without removing it from the machine.

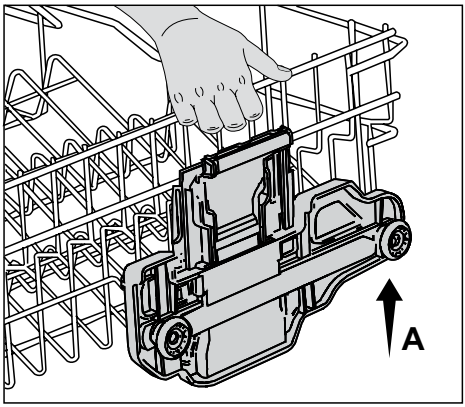

To raise the basket:

1. Grab one of the upper basket wires (right or left) and lift it up (A).
2. Repeat the same process to raise the other side of the basket.
3. Make sure that both sides of the basket height adjustment mechanism are at the same level (down or up).

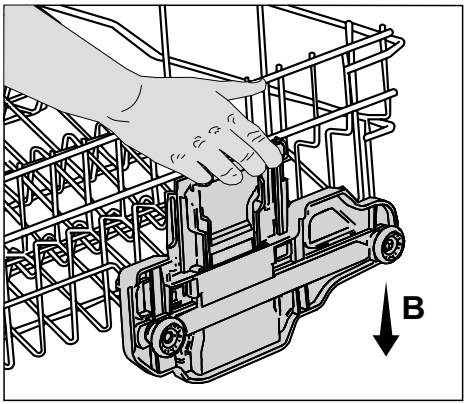

To lower the basket:

1. Press the latch on the basket adjustment mechanism (right or left) to lower the basket (B).
2. Repeat the same process to lower the other side of the basket.
3. Make sure that both sides of the basket height adjustment mechanism are at the same level (down or up).

Adjusting the height of loaded upper basket

(depends on the model)

Basket adjustment mechanism on the upper basket of the machine is designed to allow you create wider areas in the upper or lover section of the machine based on your requirements by adjusting the height of the loaded basket in up or down directions without removing it from the machine.

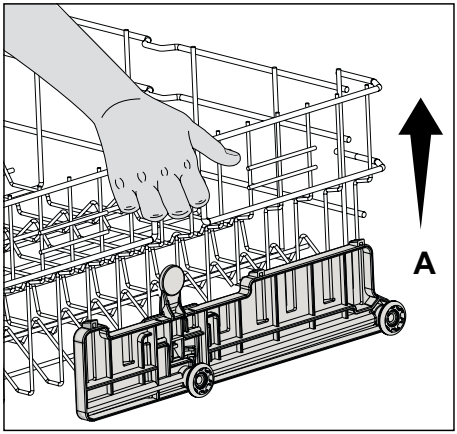

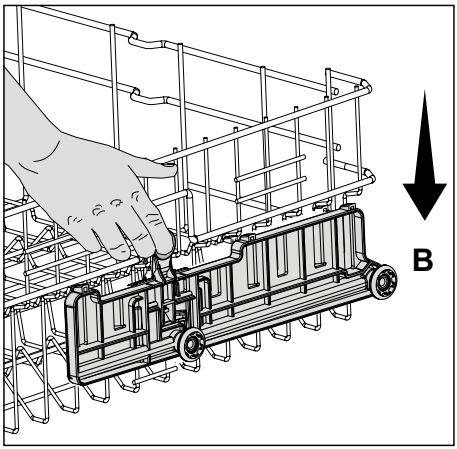

To raise the basket:

1. Grab one of the upper basket wires (right or left) and lift it up (A).
2. Repeat the same process to raise the other side of the basket.
3. Make sure that both sides of the basket height adjustment mechanism are at the same level (down or up).

To lower the basket:

1. Press the latch on the basket adjustment mechanism (right or left) to lower the basket (B).
2. Repeat the same process to lower the other side of the basket.
3. Make sure that both sides of the basket height adjustment mechanism are at the same level (down or up).

Adjusting the height of empty upper basket

(depends on the model)

You can adjust the height of the upper basket according to the size of the dish to be washed. Use basket rollers to change the basket height.

1. Turn the stoppers on the ends of the upper basket rails by turning them aside (A).
2. Take the basket out (B).
3. Change the position of the rollers, place the basket into the rail and close the stoppers (C).

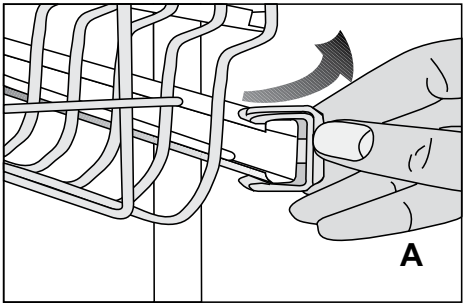

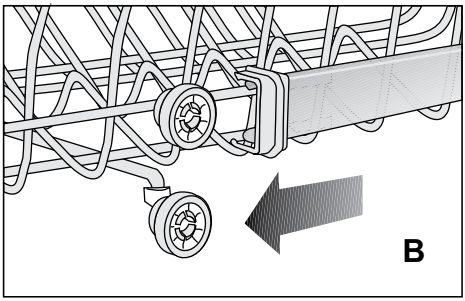

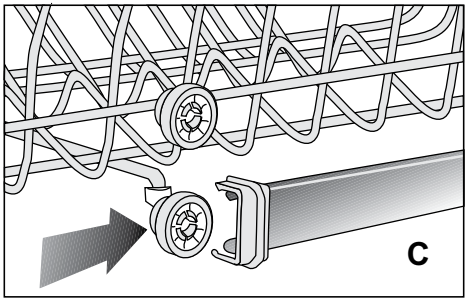

Ceiling silverware basket

Ceiling silverware basket is designed to wash small items or items that are too long to fit into the lower silverware basket.

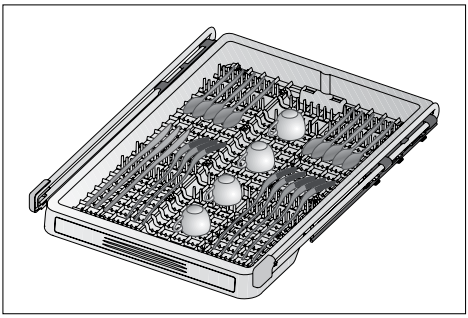

Since it can be removed from the machine easily, it allows taking out the dishes from the machine together with the basket after they are washed. It is compatible with all standard drawer sizes and can be placed into kitchen drawers and racks. Thus, there is no need to take the dishes out of the basket and lay them anymore.

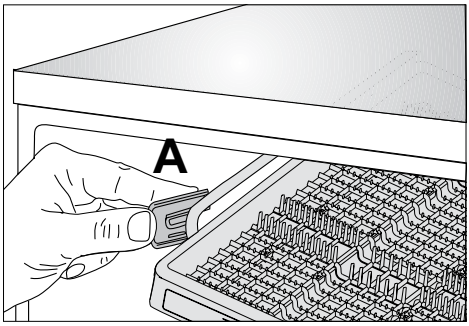

Removing and installing the ceiling silverware basket:

1. Pull the basket towards yourself.
2. Turn the rail caps (A) outwards and pull them towards yourself to remove them.
3. Raise the basket upwards and take it out the machine.
4. Pull the carrier piece towards yourself to remove it from the rails.
5. Replace the rail caps and push the rails back into their places.
6. Turn the rails inside the machine outwards (B) and seat them properly in their places.

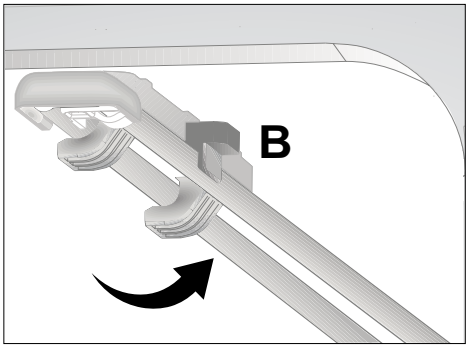

ⓘ In order to install the ceiling silverware basket into its place, repeat the removal process in reverse order.

5 Maintenance and cleaning

Service life of the product extends and frequently faced problems decrease if it is cleaned at regular intervals.

⚠ Unplug the product and turn off the tap before attempting any cleaning procedures.

ⓘ Do not use abrasive substances for cleaning.

ⓘ Clean the filters and impellers at least once a week.

Cleaning the outer surface of the product

Clean the outer surface and door gaskets of the product gently with a mild cleaning material and damp cloth. Wipe the control panel only with a damp cloth.

Cleaning the interior of the machine

- Clean the interior of the machine and the tank by running a prewash programme without detergent or a long washing programme with detergent based on the degree of soiling.
- If water has remained in the machine, drain the water by performing the procedures under the topic “Canceling a programme”. If the water cannot be discharged, clean any leftover deposits that have piled up in the bottom of the machine, blocking the water path.

Cleaning the filters

Clean the filters at least once a week for the machine to operate efficiently. Check if food residues are left on the filters. If there are food residues on filters, take them out and clean well under running water.

1. Turn the micro filter (3) and coarse filter (2) assembly counter clockwise and pull it out from its seating (A).

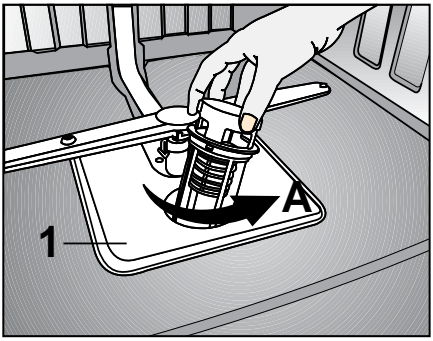

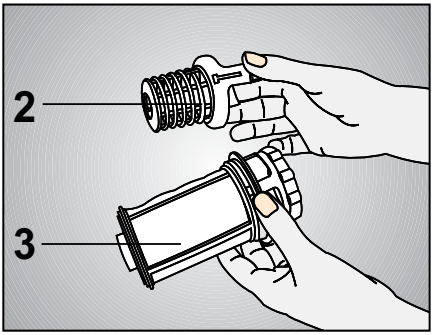

2. Pull out the metal / plastic filter (1) (B).

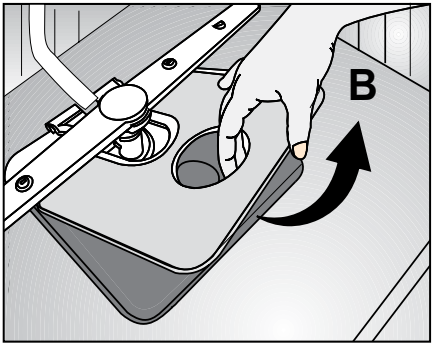

3. Press the two pawls on the coarse filter inwards and separate the coarse filter from the assembly (C).

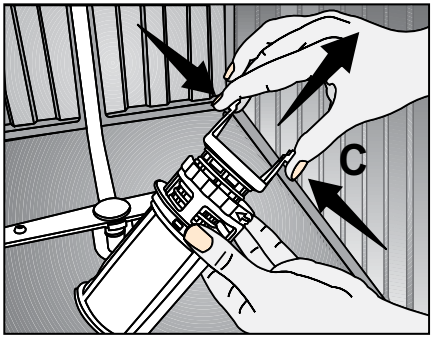

4. Clean all three filters under tap water by means of a brush.
5. Replace the metal/plastic filter.
6. Place the coarse filter into the microfilter. Make sure that it is properly seated. Turn the coarse filter clockwise until a “click” sound is heard.

⚠ Do not use the dishwasher without filter.

ⓘ Incorrect placement of the filters will reduce washing efficiency.

Cleaning the hose filter

Damages on the machine that may be caused by impurities coming from the urban supply water or your own water installation (such as sand, dirt, rust, etc.) can be prevented by means of the filter attached to the water inlet hose. Check the filter and the hose regularly and clean them if necessary.

1. Turn off the tap and remove the hose.
2. After taking out the filter, clean it under running tap water.
3. Place the cleaned filter back to its seat in the hose.
4. Install the hose to tap.

Cleaning the impellers

Clean the impellers at least once a week in order for the machine operates efficiently.

Lower impeller

Check if the holes on the lower impeller (1) are clogged. If they are clogged, remove and clean the impeller. Pull the lower impeller up to remove it (A, B).

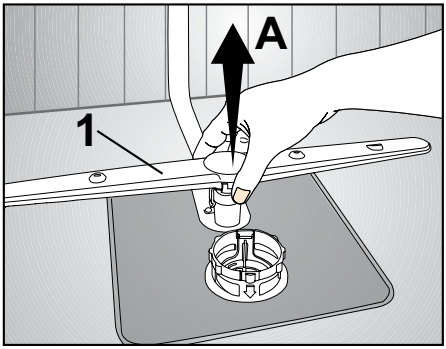

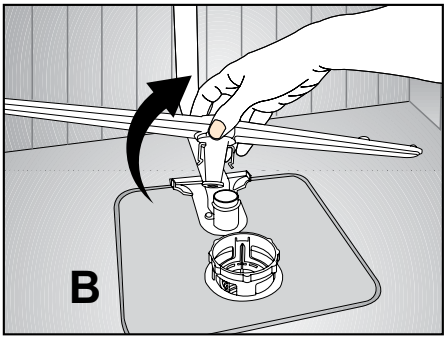

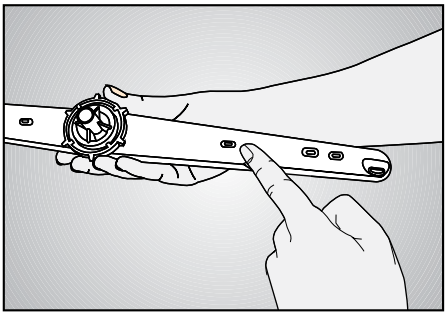

Upper impeller
Check if the holes on the upper impeller (2) are clogged. If they are clogged, remove and clean the impeller. Turn its nut to left to remove the upper impeller (C, D).
Make sure that the nut is tightened well when installing the upper impeller.

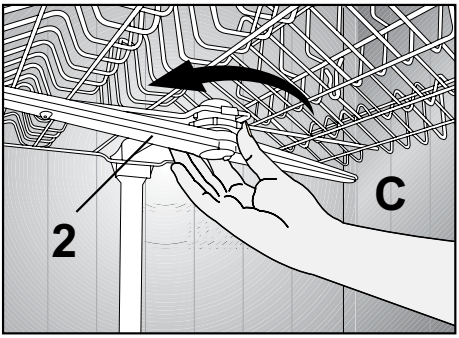

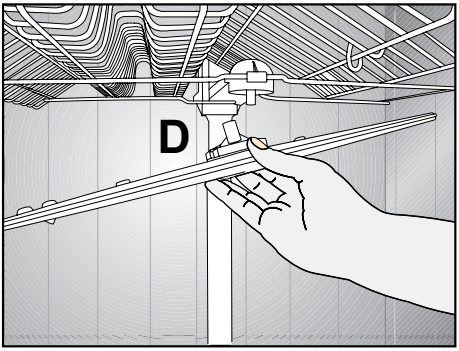

Ceiling impeller
Check if the holes on the top ceiling impeller (3) of your machine are clogged. If they are clogged, remove and clean.

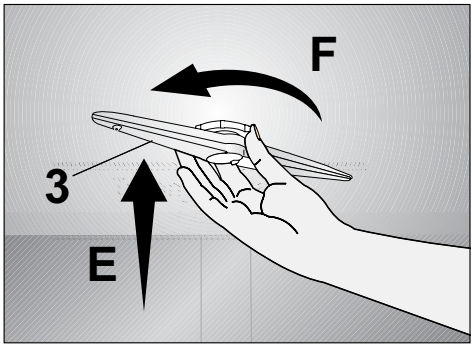

To remove the impeller, slightly (E) push it upwards and then turn clockwise (F).
To install the impeller, seat it into its slot, push slightly upwards and turn it anticlockwise until it is securely fitted. When the impeller is released, check if it rotates without any obstruction.

6 Troubleshooting

Machine does not start.

- Power cable is unplugged. >>> *Check if the power cable is plugged in.*
- Fuse is blown. >>> *Check the fuses in your house.*
- Water is cut. >>> *Make sure that the water inlet tap is open.*
- Door of the machine is open. >>> *Make sure that you have closed the door of the machine.*
- On / Off button is not pressed. >>> *Make sure that you have turned on the machine by pressing the On / Off button.*

Dishes are not washed clean

- Dishes are not placed orderly in the machine. >>> *Load the dishes as described in the user manual.*
- Selected programme is unsuitable. >>> *Select a programme with a higher temperature and cycle time.*
- Impellers are stuck. >>> *Prior to starting the programme, turn the lower and upper impellers by hand to make sure that they rotate freely.*
- Impeller holes are clogged. >>> *Lower and upper impeller holes might be clogged with food remnants such as lemon pips. Clean the impellers regularly as illustrated in section “Cleaning and Care”.*
- Filters are clogged. >>> *Check if the filter system is clean. Clean the filter system regularly as illustrated in section “Cleaning and Care”.*
- Filters are installed incorrectly. >>> *Check the filter system and make sure that it is installed correctly.*
- Baskets are overloaded. >>> *Do not overload the baskets in excess of their capacity.*
- Detergent is stored under unsuitable conditions. >>> *If you are using powder detergent, do not store the detergent package in humid places. Keep it in a closed container if possible. For ease-of-storing, we recommend you to use tabltet detergents.*
- Detergent is not sufficient. >>> *If you are using powder detergent, adjust the amount of detergent according to the soiling degree of your dishes and/or programme definitions. We recommend you to use tabltet detergents for optimum results.*
- Rinse aid is not sufficient. >>> *Check the rinse aid indicator and add rinse aid if necessary. Increase the rinse aid setting if there is enough amount of rinse aid in the machine.*
- Detergent dispenser lid is left open. >>> *Make sure that the detergent dispenser lid is closed tightly after adding detergent.*

Dishes are not dry at the end of cycle

- Dishes are not placed orderly in the machine. >>> *Place your dishes in a way that no water will accumulate in them.*
- Rinse aid is not sufficient. >>> *Check the rinse aid indicator and add rinse aid if necessary. Increase the rinse aid setting if there is enough amount of rinse aid in the machine.*
- Machine is unloaded right after the programme is over. >>> *Do not unload your machine right after washing process is completed. Slightly open the door and wait for evacuation of the steam inside for a while. Unload the dishes after the pieces cool down to a touchable level. Start unloading process from the lower basket. Thus, dropping of water remained on a piece at upper basket onto the pieces at lower basket is prevented.*
- Selected programme is unsuitable. >>> *Since rinsing temperature is low at programmes with short duration, drying performance will also be low. Select programmes with longer duration for a higher drying performance.*
- Surface quality of the kitchen utensils is deteriorated. Desired washing performace cannot be obtained on kitchen utensils with deteriorated surfaces *and it is not suitable to use such utensils in terms of hygiene as well. Also, water can not flow easily on deteriorated surfaces. It is not recommended to wash such kitchen utensils in dishwasher.*

ⓘ It is normal that drying complaints can be experienced with Teflon kitchen utensils. It is associated with the structure of Teflon. Since the surface tensions of Teflon and water are different, water droplets will remain as beads on the Teflon surface.

Tea, cafe or lipstick stains remain on dishes.

- Selected programme is unsuitable. >>> *Select a programme with a higher temperature and cycle time.*
- Surface quality of the kitchen utensils is deteriorated. >>> *Tea and cafe stains or other dye spots may not be cleaned in dishwasher when they have penetrated in deteriorated surfaces. Desired washing performance can not be obtained at kitchen utensils with deteriorated surfaces and it is not suitable to use such utensils in terms of hygiene as well. It is not recommended to wash such kitchen utensils in dishwasher.*
- Detergent is stored under unsuitable conditions. >>> *If you are using powder detergent, do not store the detergent package in humid places. Keep it in a closed container if possible. For ease-of-storing, we recommend you to use tabltet detergents.*

Lime traces remain on dishes and glassware gains a misty appearance

- Rinse aid is not sufficient. >>> *Check the rinse aid indicator and add rinse aid if necessary. Increase the rinse aid setting if there is enough amount of rinse aid in the machine.*

There is a different odour in the machine

ⓘ A new machine has a peculiar odour. It will fade out after a couple of washing.

- Filters are clogged. >>> *Check if the filter system is clean. Clean the filter system regularly as illustrated in section "Cleaning and Care".*
- Dirty dishes are kept in dishwasher for 2-3 days. >>> *If you are not going to start the machine right after you have put the dishes into it, remove the remnants on the dishes and run the Prewash programme without detergent every 2 days. In such cases, do not close the door of the machine completely in order to avoid odour build up in machine. You can also use commercially available odour removers or machine cleaners.*

Rust, discoloration or surface deterioration occurs on dishes

- Salty food remnants have remained on dishes for a long time. >>> *If silverware soiled with such foods will be kept waiting in machine, dirt must be removed by prewash or dishes must be washed without being kept waiting.*
- Electric installation is not grounded. >>>*Check if your machine is connected to the actual grounding line. Otherwise, the static electric created in the product causes arcs on the surfaces of metal items creating pores, removing the protective cover on the surface and causing discoloration.*
- Intensive cleansers such as bleaches are used. >>> *Protective cover on metal surfaces gets damaged and looses its efficiency in time when it gets in contact with cleansers such as bleach. Do not wash your dishes with bleach.*
- Metal items particularly such as knives are used for purposes other then their intended uses. >>> *Protective cover on the edges of knives may get damaged when they are used for purposes such as opening cans. Do not use metal kitchen utensils out of their intended uses.*
- Silverware are made of low quality stainless steel. >>> *Corrosion on such items is inevitable; they should not be washed in dishwashers.*
- Kitchen utensils that are already corroded are washed in dishwasher. >>> *Rust on a corroded item can migrate to other stainless steel surfaces and cause corrosion on those surfaces as well. Such items should not be washed in dishwashers.*

Detergent remains in detergent dispenser.

- Detergent dispenser was damp when adding detergent. >>> *Make sure that the detergent dispenser is dried well prior to filling it with detergent.*
- Detergent is added long before the washing process. >>> *Pay attention to add detergent shortly before start-up of the washing.*
- Opening of the detergent dispenser lid is prevented during washing. >>> *Place the dishes in a way that will not prevent the detergent dispenser lid from opening and the water going into the machine from impellers.*
- Detergent is stored under unsuitable conditions. >>> *If you are using powder detergent, do not store the detergent package in humid places. Keep it in a closed container if possible. For ease-of-storing, we recommend you to use tabltet detergents.*
- Impeller holes are clogged. >>> *Lower and upper impeller holes might be clogged with food remnants such as lemon pips. Clean the impellers regularly as illustrated in section "Cleaning and Care".*

Decorations and ornaments on kitchen utensils are being erased.

ⓘ Decorated glasses and decorated luster porcelains are not suitable for washing in the dishwasher. Manufacturers of glassware and porcelain tableware items do not recommend washing such kitchen utensils in the dishwashers either.

Dishes are scratched.

ⓘ Kitchen utensils that contains or are made of aluminum should not be washed in dishwasher.

- Dishes are not placed orderly in the machine. >>> *When placing the glasses and other glassware into the basket lean them not against other dishes but the edges or racks of the basket or the glass support wire.* Striking of the glasses to each other or to other dishes due to the impact of water during washing can cause breaks, or scratches on their surfaces.

A smear remains on glasses that resembles milk stain which can not be removed when wiped by hand. A bluish / rainbow appearance occurs when the glass is pointed to light.

- Excessive rinse aid is used. >>>*Lower rinse aid setting. Clean the spilled rinse aid when adding rinse aid.*
- Corrosion has occurred on glass due to soft water. >>> *Measure the hardness of the supply water appropriately. Choose programmes that wash in higher temperatures (e.g. 60-65°C). You can also use glass protective detergents that are commercially available.*

Foam forms in the machine.

- Dishes are washed with hand-wash detergent by hand but not rinsed before placing them into the machine. >>> *Hand-wash detergents do not contain antifoam. There is no need to hand-wash the dishes before placing them into the machine. Removing the coarse soil on the dishes under tap water, with a tissue paper or fork will be sufficient.*
- Rinse aid has spilled into the machine when adding rinse aid. >>> *Take care that rinse aid is not spilled in the machine when you are filling it. Clean any spilled rinse ait with the help of a tissue paper/towel.*
- Lid of the rinse aid reservoir is left open. >>> *Make sure that the lid of the rinse aid reservoir is closed after adding rinse aid.*

Kitchen utensils are broken.

- Dishes are not placed orderly in the machine. >>> *Load the dishes as described in the user manual.*
- Baskets are overloaded. >>> *Do not overload the baskets in excess of their capacity.*

Water remains in the dishwasher at the end of the programme.

- Filters are clogged. >>> *Check if the filter system is clean. Clean the filter system regularly as illustrated in section "Cleaning and Care".*
- Discharge hose is clogged/blocked. >>> *Check the discharge hose. If necessary, remove the discharge hose, clear the blockage and insert is as illustrated in the user manual.*

ⓘ If you cannot eliminate the problem although you follow the instructions in this section, consult your dealer or the Authorised Service Agent. Never try to repair a nonfunctional product yourself.