Cooker hood

INSTRUCTION MANUAL

Read this manual carefully before operation
Pictures in this manual are for reference only.

For Models:

BL110B / BL110S

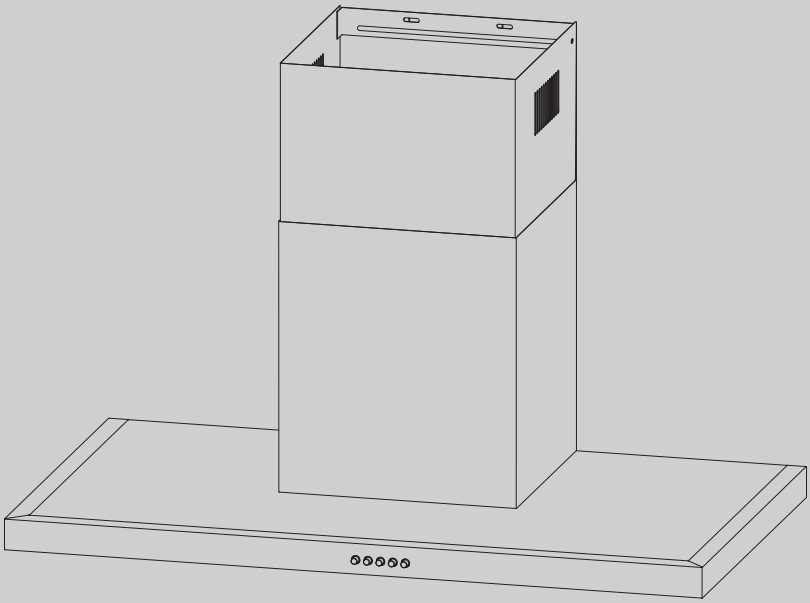

belling

Contents

01 Contents.....1

02 Warnings.....2

03 Safety Warning.....3

04 Installation.....4

05 Use.....7

06 Maintenance.....8

07 Trouble Shooting.....9

08 Specifications.....10

09 Disposal.....10

Warnings

- This appliance can be used by children aged from 8 years and above and persons with reduced physical, sensory or mental capabilities or lack of experience and knowledge if they have been given supervision or instruction concerning use of the appliance in a safe way and understand the hazards involved. Children shall not play with the appliance. Cleaning and user maintenance shall not be made by children without supervision. If the supply cord is damaged, it must be replaced by the manufacturer, its service agent or similarly qualified persons in order to avoid a hazard.
- There shall be adequate ventilation of the room when the range hood is used at the same time as appliances burning gas or other fuels.
- The filter is made of high density aluminum.
- Please do not use corrosive detergent for cleaning. The proper function of the unit is conditioned by the regularity of the maintenance.
- To protect the main body from corrosion caused by long time accumulation of dirt, the cooker hood should becleaned with hot water with non-corrosive detergent every two months.
- There is a fire risk if cleaning is not carried out in accordance with the instructions.
- The air must not be discharged into a flue that is used for exhausting fumes from appliances burning gas or other fuels.
- The minimum distance between the supporting surface for the cooking vessels on the hob and the lowest part of the range hood is 650mm.
- Regulations concerning the discharge of air have to be fulfilled.
- CAUTION : Accessible parts may become hot when used with cooking appliances.

- The appliance is not intended for use by young children or infirm persons without supervision.
- Young children should be supervised to ensure they do not play with the appliance.

  This appliance must be plugged into an earthed power point.
- The cooker hood is for home use only, not suitable for barbecue, roast shop and other commercial purposes.
- The cooker hood and its filter should be cleaned regularly according to the instruction.
- If any fault occurs with the appliance, please call after-sales service department.
- Please keep the kitchen ventilated.
- Prior to any maintenance, cleaning operation, ensure the power is off.
- If the supply cord is damaged, it must be replaced by the manufacturer, service agent or similarly qualified person in order to avoid a hazard.
- Follow the local laws applicable for external air evacuation.

Installation

- The bending of ventilation tube should be ≥120°,parallel or above the start point/should be connected to the external wall.
- Please make sure the installation plate is placed horizontally to avoid grease collection at one end. See Fig.1.

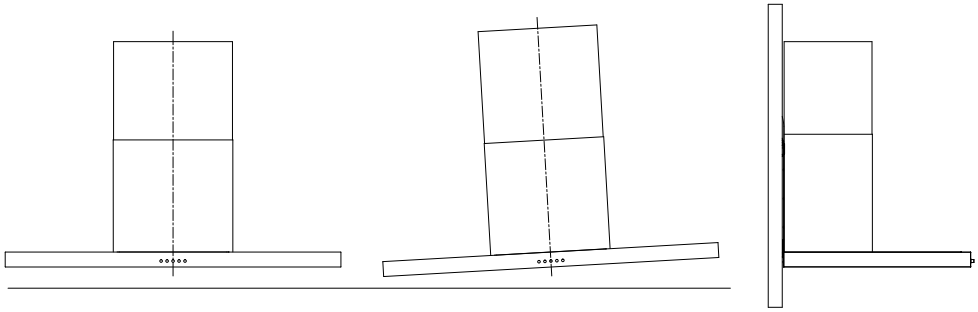

Right Wrong Fig.1

- After installation, make sure that plug can be removed if necessary.
- The cooker hood should be placed 650~750 mm up from the cooking plane for safe and a good effect. See Fig.2.
- There shall be adequate ventilation of the room when the cooker hood is working.

Option	Chimney	X
√	400X400	110-500
	500X500	210-700
	600X600	310-900

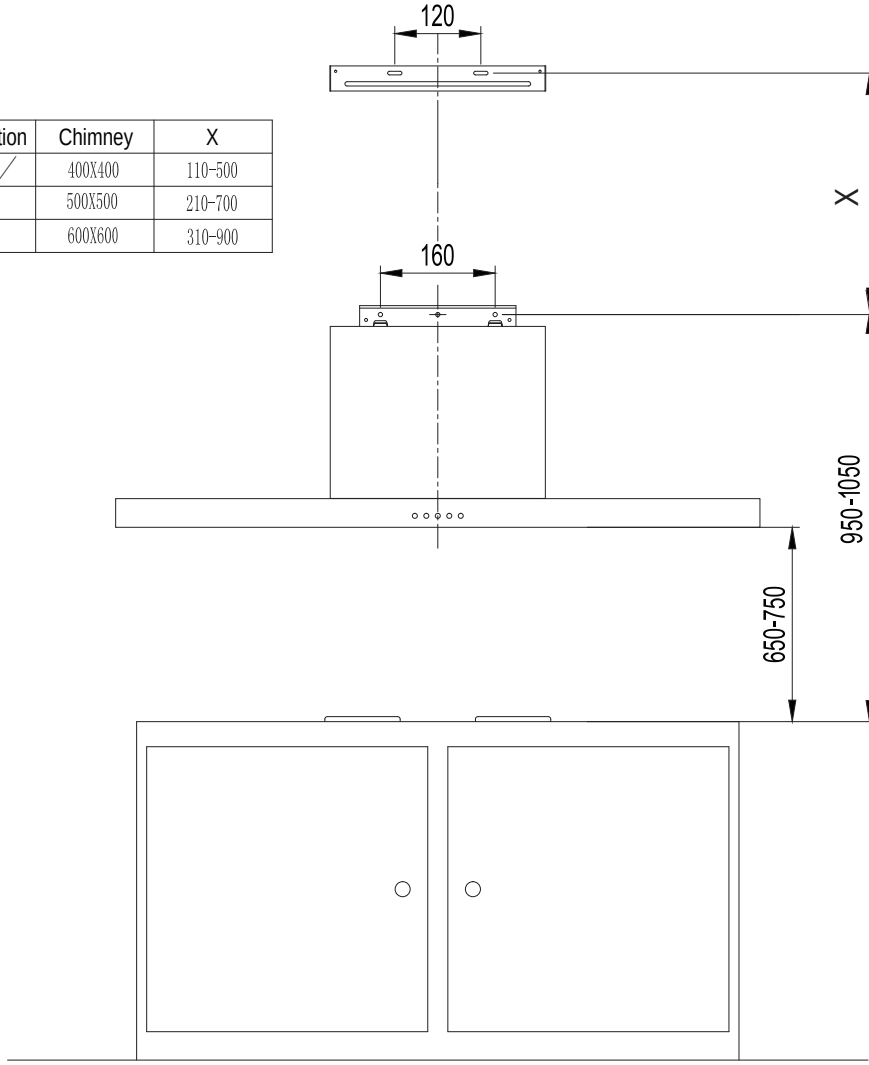

Fig.2

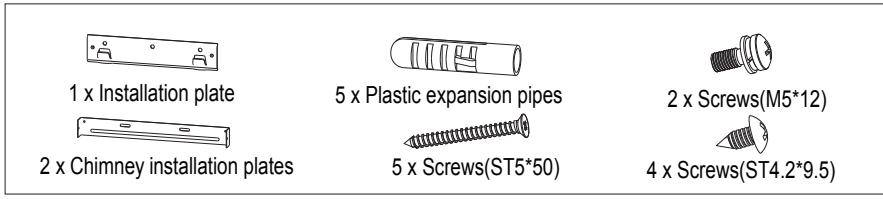

Fig.3

Installation

- Accessories. See Fig.3. (Type and quantity of accessories is subject to actual demand.)
- Fit installation plate and extension chimney installation plate, install the plastic expansion pipes of chimney installation plate on wall. See Fig.4.
- Hang range hood on the installation plate. See Fig.5.
- Fit the exhaust pipe on the main body, lock screws (M5*12) to prevent the range hood from accidently sliding off the installation plate. See Fig.6.
- Connect chimney installation plate and chimney. See Fig.7.
- Fit chimney installation plate. See Fig.8.
- Fit the extension chimney. See Fig.9.

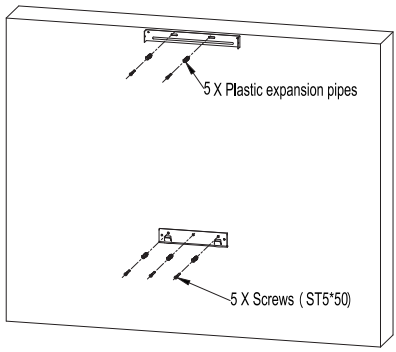

Fig.4

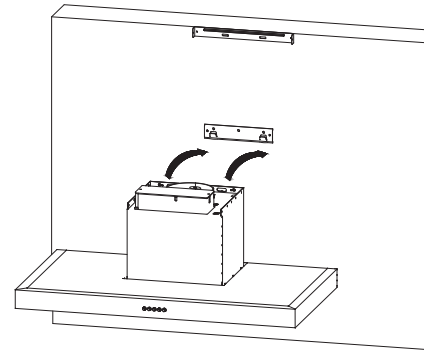

Fig.5

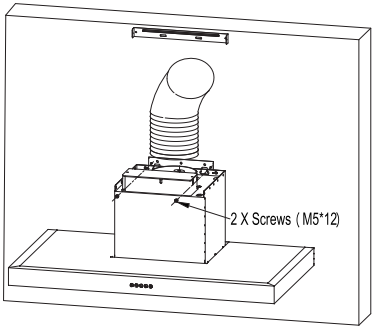

Fig.6

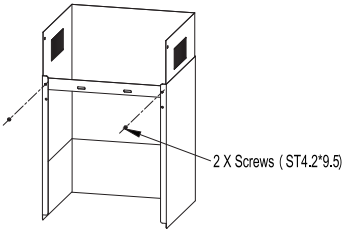

Fig.7

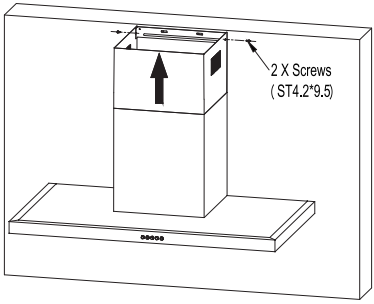

Fig.9

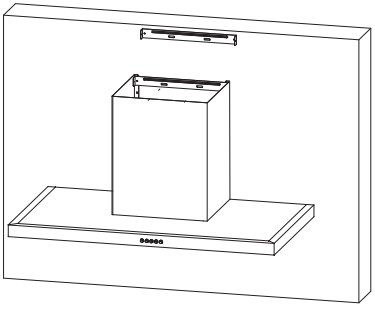

Fig.8



Fig.10.1

Use

Speed adjustment. See Fig.10.1.(For some models)

- Press Stop button, the motor will stop running.
- Press the Low (speed) button, the motor runs at low speed.
- Press the Mid (speed) button, the motor runs at mid speed.
- Press the High (speed) button, the motor runs at high speed.
- Press the Light button, the two lighting lamps will come on.
- Press it again and the lamps will be turned off.

Cleaning of the filters

- Removing the filters according to Fig.11.
- Put into a dishwasher with detergent, set the temperature below 60 degrees.
- Please do not use abrasive detergent for it will damage the hood.
- Make sure that the hood is shut off before cleaning.

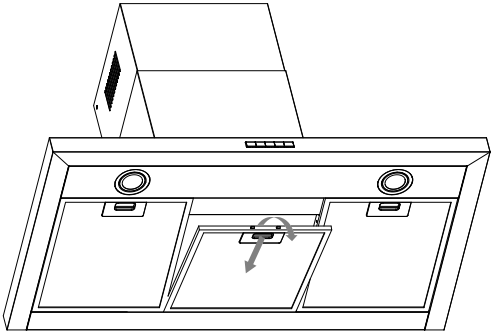

Fig.11

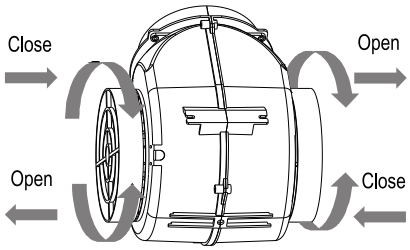

Fig.12

Replacement of the carbon filters (Optional)

- Remove the filters see Fig.11.
- The carbon filters are located at both end of the motor.
  Turn the carbon filters until they are locked. See Fig.12.
- Apply reverse procedure to remove the carbon filter.
- It should be replaced after approximately 2-3 months of use.
- The carbon filer cannot be washed or recycled.
- Carbon filter is not supplied with your appliance.

Fault	Cause	Solution
Light on, but motor does not work.	The blades are blocked.	
	The capacitor is damaged.	Replace capacitor.
	The motor is damaged.	Replace motor.
	The internal wiring of motor is cut off / disconnected. An unpleaseant smell may be produced.	Replace motor.
Both light and motor do not work.	Apart from the above mentioned, check the following:	
	Light damaged.	Replace lights.
	Power cord loose.	Connect the wires as per the electric diagram.
Oil leakage.	Outlet and the air ventilation entrance are not tightly sealed.	Take down the outlet and seal with glue.
	Leakage from the connection of U-shaped section and cover.	Take U-shaped section down and seal with soap or paint.
Vibration.	The blade, if damaged, can cause vibrating.	Replace the blade.
	The motor is not tightly fastened.	Fasten the motor tightly.
	The cooker hood is not tightly fixed.	Fixed the cooker hood tightly.
Insufficient suction.	The distance between the cooker hood and the cooker top is too large.	Readjust the distance.
	Too much ventilation from open doors or windows.	Choose a new place to install the appliance or close some doors / windows.
The machine inclines.	The fixing screws are not tight enough.	Tighten the fixing screw and make it horizontal.
	The hanging screws are not tight enough.	Tighten the hanging screw and make it horizontal.

Electrical Diagram

- Electrical diagram see label on main body of the actual product.

Specifications

Voltage	220-240V~50/60Hz
Rated Power	333W
Lighting Power	2 X 1.5W
Motor Power	330W
Diameter of air tube	150mm
Air flow	800m³/h
Noise	≤74dB

The air flow parameter is tested under conditions of 230V~50Hz when the voltage is 220-240V~ 50/60Hz and without carbon filters.

Disposal



Please dispose of it at your local community waste collection / recycling center and ensure it presents no danger to children while being stored for disposal. The plug must be rendered useless and the cable cut off to prevent misuse.

The manufacturer shall decline all responsibility if the foregoing recommendations and instruction regarding installation, maintenance and use are not observed and respected when using the cooker hood.

Glen Dimplex Australia Pty Ltd
1340 Ferntree Gully Road
Scoresby VIc 3179
Ph: 1300 556 816
Fax: 1800 058 900
Web: www.belling.com.au

Glen Dimplex New Zealand
38 Harris Road
East Tamaki
Auckland New Zealand
Ph: 09 274 2865
Fax: 09 274 8472
Web: www.belling.co.nz