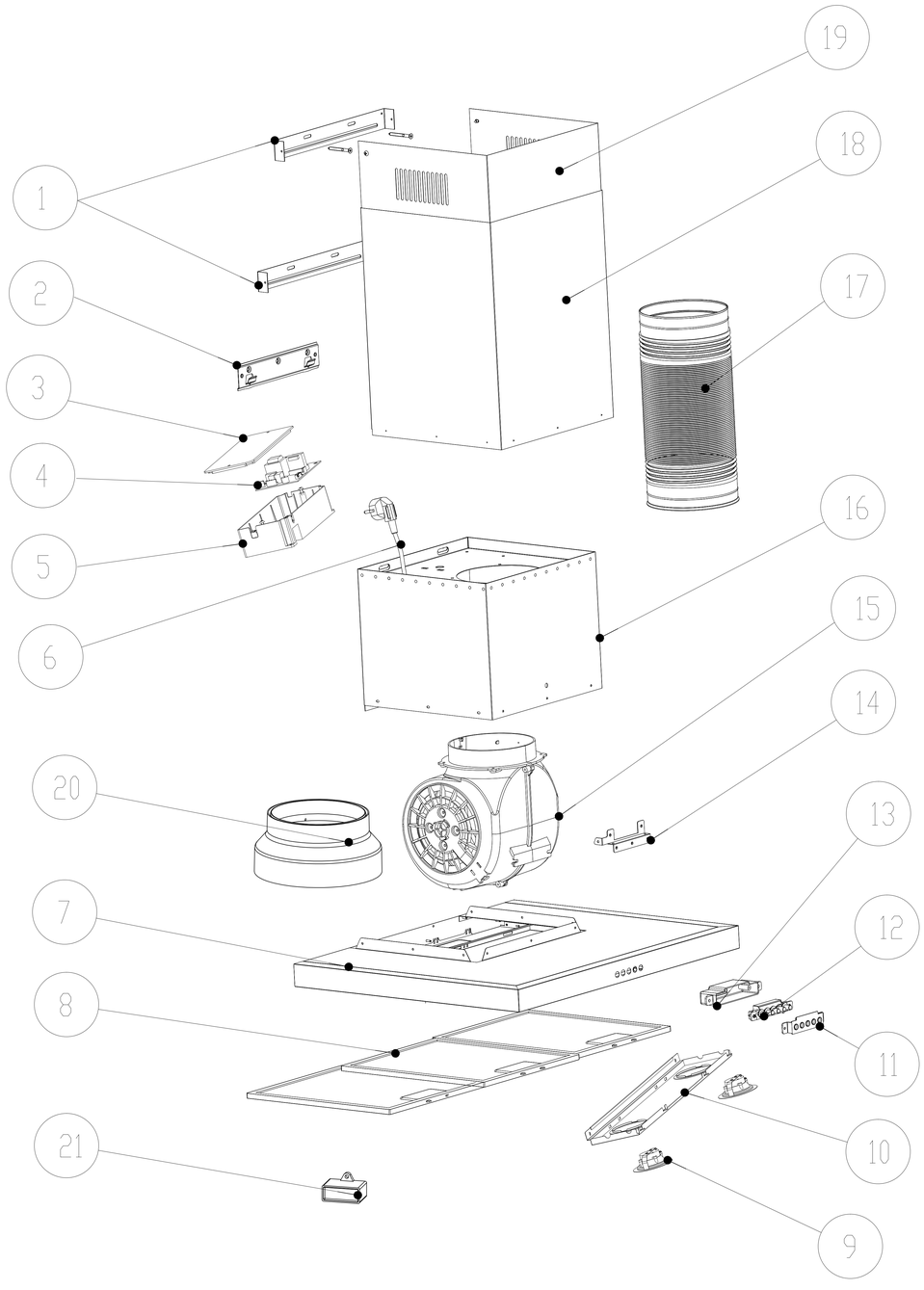

21		Capacitor	1	
20		Smoke duct connection	1	
19		adjustable decorating trim	1	
18		decorate-cover	1	
17		smoke duct	1	
16		Frame groupware	1	
15		Fan groupware	1	
14		Volute stents	1	
13		switch box	1	
12		switch	1	
11		switch box cover	1	
10		Front plate	1	
9		Lamp	2	
8		Grease filter	3	
7		body groupware	1	
6		power cord groupware	1	
5		junction box	1	
4		Top plate	1	
3		control box cover	1	
2		bracket	1	
1		Decorate-cover hang board	2	

Model: BL110B

No	Part No.	Description	Qty
00001	12273000000254	DECORATE-COVER HANG BOARD	2
00002	12273000000255	BRACKET	1
00003	12173000001020	CONTROL BOX COVER	1
00004	17173000000092	TOP PLATE	1
00005	12173000001022	JUNCTION BOX	1
00006	17473000000966	POWER CORD GROUPWARE	1
00007	12273000004432	BODY GROUPWARE	1
00008	12273000000177	GREASE FILTER	3
00009	17473000000136	LAMP	2
00010	12273000000465	FRONT PLATE	1
00011	12173000000118	SWITCH BOX COVER	1
00012	17473000000096	SWITCH	1
00013	12173000000300	SWITCH BOX	1
00014	12273000003372	VOLUTE STENTS	1
00015	12973000000203	FAN GROUPWARE	1
00016	12273000000965	FRAME GROUPWARE	1
00017	12173000000013	SMOKE DUCT	1
00018	12273000001478	DECORATE-COVER	1
00019	12273000001479	ADJUSTABLE DECORATING TRIM	1
00020	12173000000249	SMOKE DUCT CONNECTION	1
00021	17473000000173	CAPACITOR	1