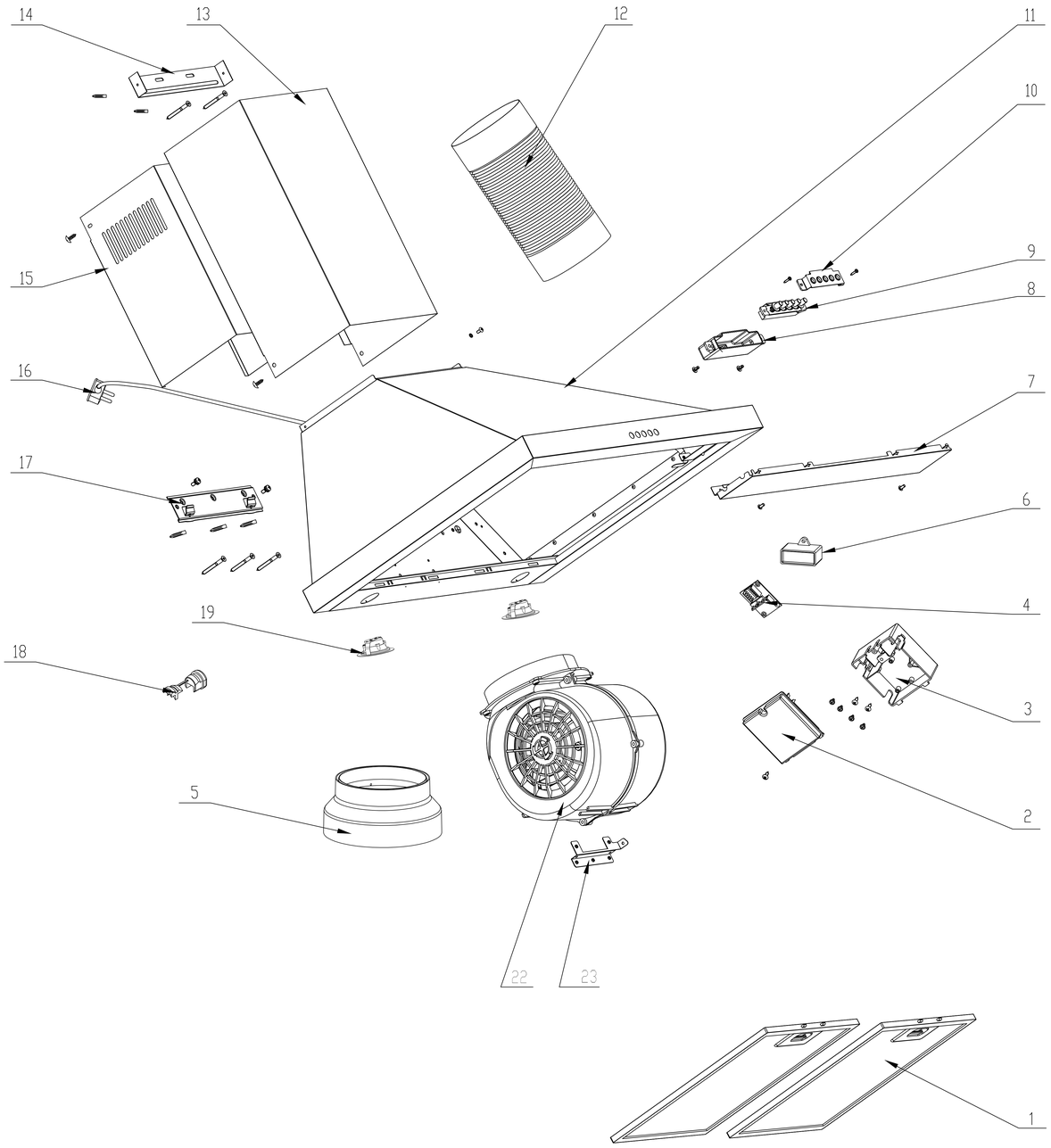

23		Volute feet	1	
22		Fan assembly	1	
19		lamp	2	
18		Power line deduction	1	
17		bracket	1	
16		power cord groupware	1	
15		adjustable decorate-cover bracket	1	
14		adjustable decorate-cover	1	
13		decorate-cover	1	
12		smoke duct	1	
11		body assembly	1	
10		control box cover	1	
9		switch	1	
8		control box	1	
7		Front plate	1	
6		Capacitor	1	
5		Smoke duct connection	1	
4		connection board	1	
3		junction box	1	
2		junction box cover	1	
1		filter assembly	2	
NO.		Name	QTY	

Model: BC60B

No	Part No.	Description	Qty
1	12273000000174	FILTER ASSEMBLY	2
2	12173000001020	JUNCTION BOX COVER	1
3	12173000001022	JUNCTION BOX	1
4	17173000000092	CONNECTION BOARD	1
5	12173000000249	SMOKE DUCT CONNECTION	1
6	17473000000173	CAPACITOR	1
7	12273000000447	FRONT PLATE	1
8	12173000000300	CONTROL BOX	1
9	17473000000098	SWITCH	1
10	12173000000118	CONTROL BOX COVER	1
11	12273000001107	BODY ASSEMBLY	1
12	12173000000013	SMOKE DUCT	1
13	12273000000312	DECORATE-COVER	1
14	12273000000257	ADJUSTABLE DECORATE-COVER	1
15	12273000000311	ADJUSTABLE DECORATE-COVER BRACKET	1
16	17473000000966	POWER CORD GROUPWARE	1
17	12273000000255	BRACKET	1
18	12170000000155	POWER LINE DEDUCTION	1
19	17473000000136	LAMP	2
22	12973000000203	FAN ASSEMBLY	1
23	12273000001210	VOLUTE FEET	1