Instruction Manual
Upright Cooker
90cm

BAU95EE
BAU95EG

Baumatic

Congratulations on purchasing your new Baumatic product.

It is important that you read through the following use and care manual thoroughly to familiarize yourself with the installation and operation requirements of your appliance to ensure optimum performance.

Our Customer Care centre is there to ensure you get the most out of your appliance.

For any after sales service please contact our

Customer Care team

on

1800 444 357

or email

service@hapl.com.au

We also carry a complete range of spare parts for all Baumatic products. For all your spare parts enquiries please contact our team at **Pronto Parts** on:

1300 306 973

Baumatic Australia is a division of Home Appliances PTY LTD
20 Carlotta Street Artarmon 2064
Sales
1800 805 300
Service
1800 444 357
Website
www.baumatic.com.au

Important information

Introducing your new cooker
We thank you and congratulate you on your choice.
These instructions cover two cooker models: BAU95EG and BAU95EE
These carefully designed products, manufactured with the highest quality materials, have been corefully tested to satisfy all your cooking demands.
We therefore request that you read and follow these easy instructions which will allow you to obtain excellent results right from the start.
All gas upright cookers feature a gas hotplate containing 5 cooktop burners, including one centrai wok burner, and the multi-function ovens.
The cooker's data plate is accessible even with the cooker fully installed. It is positioned on the inside of the oven door, centre bottom. A copy of the data plate is also reproduced on last page of this booklet. Always quote the details from it to identify the appliance when ordering spare parts or requesting a service.

Notes on disposal
Old applia nces still have some residual value. An environmentally friendly method of disposal will ensure that valuable raw materials can be recovered and used again.
Before you dispose of your old appliance, make sure that it has been rendered inoperable.
Your new cooker was protected by suitable packaging while it was on its way to you. All materials used for this purpose are environmentally friendly and suitable for recyding.
Please make a contribution to protecting the environment by disposing of the packaging appropriately.

Do not spray aerosols in vicinity of this appliance while it is operation.

Where this appliance is installed in a marine environment or in caravans, for safety reasons it shall not be used as a space heater.

This appliance is unsuitable for installation in marine craft, caravans or mobile homes, unless each burner is fitted with a flame safeguard.

DO NOT MODIFY THIS APPLIANCE

DO NOT USE OR STORE FLAMMABLE MATERIALS NEAR THIS APPLIANCE.

This appliance is not intended for use by persons (including children) with reduced physical, sensory or mental capabilities, or lack of experience and knowledge, unless they have been given supervision or instruction concerning use of the appliance by a person responsible for their safely. Children should be supervised to ensure that they so not play with the appliance.
Warning: Accessible parts will become hot when in use. To avoid burns or scalds children should be kept away.
Warning: In order to prevent accidental tipping of the appliance, for example by a child climbing onto the oven door, the stabilising means must be installed. Refer to the instructions for installation.

Before connecting your new cooker

Before using your new cooker, please read these 'Instructions for Use' carefully. They contain important information concerning your personal safety as well as on use and care of the oven.

Please keep the operating and installation instructions in a safe place; this important documentation may also be of use to a possible subsequent owner.

Do not use the cooker if it is damaged in any way.

Installation and connection of the cooker should be performed according to the instructions and connection diagram provided, and should be entrusted to a licensed specialist. In the event of a damage that occurs as a result of improper connection, the warranty will be void.

Our appliances meet the applicable safety regulations for electrical appliances, Repairs may be performed only by authorised persons. Inexpert repairs may entail serious injury to you, the user

Safety considerations

Never leave the appliance unattended when cooking with fat or oil. It could ignite if overheated.

In case of a defect, switch off at the mains.

Do not clean the oven with steam or high pressure cleaners

Ensure that the power cord does not get caught in the hot oven door. The plastic insulation could melt.

Do not use loose greaseproof paper in the oven (e.g. when heating the oven). The paper could be drawn to the fan and damage the fan and the element

Do not insert a baking sheet or aluminium foil sheet at the bottom of the oven. A heat build-up could result and cooking times and temperatures could change or enamel could be damaged.

Do not pour water on the hot oven floor. Damage to enamel could result

Always piace a baking tray below a roast to prevent juices from dripping on the oven lining

Do not place heavy items on the oven door when open as this may result in damage to the door hinges

To ensure correct cooking the oven door must dose properly.

Keep the door sealing surfaces clean at all times

Installation instructions

Statutory regulations

This appliance shall be installed in accordance with the manufacturer's installation instructions, local gas fitting regulations, municipal building codes, electrical wiring regulations, AS 5601 the Australian Standard for gas installations. Refer also to AS 5601 for pipe sizing tables

Gas supply

Check that the data plate shows the appliance is suitable for the available gas supply. The data plate is located on the inside of the oven door, centre bottom. A copy of the data plates is reproduced on the last page of this booklet.

Electrical supply
All three models require connection to a **15 Amp (BAU95EG)** wall socket and **Amp 50 (BAU95EE)** circuit breacker.
Instructions
1. The model number and the type of appliance, gas pressure and gas type ore found on the inside of the oven door, centre bottom. A copy of the data plates is reproduced on the last page of this booklet.

2. The appliance requires connection to a 240 V,50 Hz electric supply. The power point must be installed by an authorized person.

3. Before commencing any work, make sure that the power point switches ore turned off and the three in plug is removed

4. If the appliance cannot be adjusted to perform correctly contact your local gas utility.
5. Instruct the user in the operation of the appliance before leaving.
Vertical clearances:
The cooker shall be installed so that a vertical clearance of at least 600 mm is maintained between its burners and any combustible material, and where this is not practicable, the underside of an combustible material less than 600 mm above the burner shall be protected by noncombustible millboard at least 6 mm thick which is covered with sheet metal not less than 0.4 mm thick, or shall be protected by an equivalent material, extending at least 225 mm beyond the sides of the cooker.

Overhead clearances:

Range hoods and exhaust fans shall be installed in accordance with the manufacturer's instructions. However, in no case shall the clearance between the top of the highest burner of the cooking appliance and the underside of a range hood be less than 600mm, or an overhead exhaust fan, 750 mm

Side clearances to vertical surface:
If the distance measured from the periphery of the nearest burner to any vertical combustible surface, is less than 200 mm, the surface shall be protected in accordance with clause 5.12.1.1 and 5.12.1.2 of A5 5601.

Installation
Make sure the minimum clearances to combustible materials are maintained during the installation including adequate space for the operation and servicing of the cooker. For height limitations use the dimensions as shown in the drawing.
Overall dimensions (with legs adiusted to 180mm).

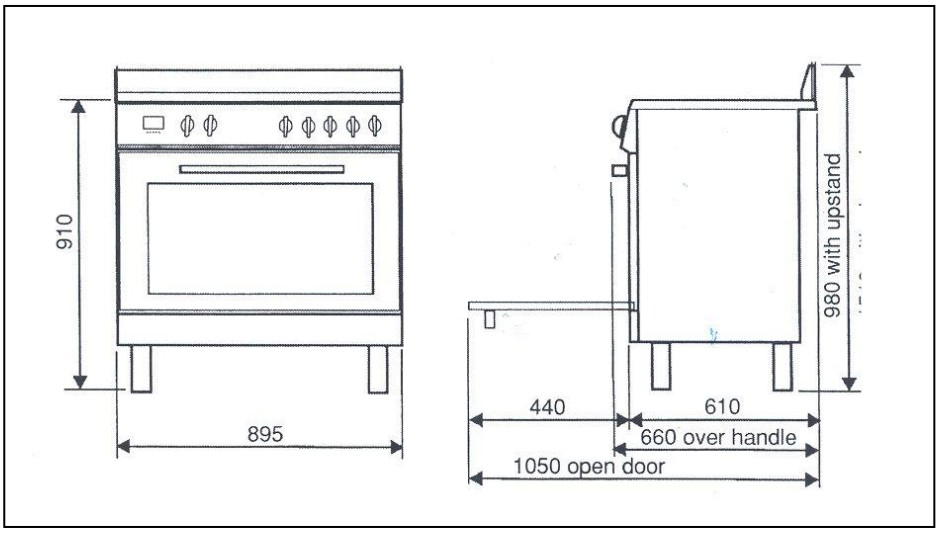

Height over upstand:	980 mm
Width:	895mm
Depth: (incl. oven door handle & knobs):	660mm
Depth: (flush with oven door):	610mm

Gas and electric connection

Electrical connection

The electric lead and plug are for connection onto a **15** Amp socket. A **15** Amp socket is to be within 1 m of the appliance.The lead is situated at the left hand side of the cooker.

Gas regulator

The gas connection is via 1/2" compression. Connect the cooker to the gas supply and check for gas soundness

If using a flexible connection

This appliance is approved for connection with a Flexible Hose, which complies with AS/NZS 1869 (AGA Approved), 10mm ID, class B or D, between 1 - 1.2m long . Connection shall be in compliance with AS 5601, clause 5.12.1.8

When installing the hose restraint device, the appliance anchor point is the rear panel securing.

If using copper connection

To allow cooker to be moved forward for service make a loop in the copper tube before connecting onto regulator.

Gas connection

The cooker must be connected to the gas supply with upstream connection of an isolation valve in accordance with the respectively valid requlations. We recommend that the isolation valve be fitted prior to the cooker to enable isolation of the cooker from the gas supply. The valve must be easily accessable at all times

To find out the factory set gps type, see label at rear of cooker

The gas connection is via 1/2" compression. Connect the cooker to the gas supply and check for gas soundness. NEVER use a naked flame to check for gas leaks.

Gas inlet (mm)- Nat gas

From RH rear side: 35 mm

Up from floor: 590 mm

Gas inlet (mm)- LPG

From RH rear side: 35mm

Up from floor: 675 mm

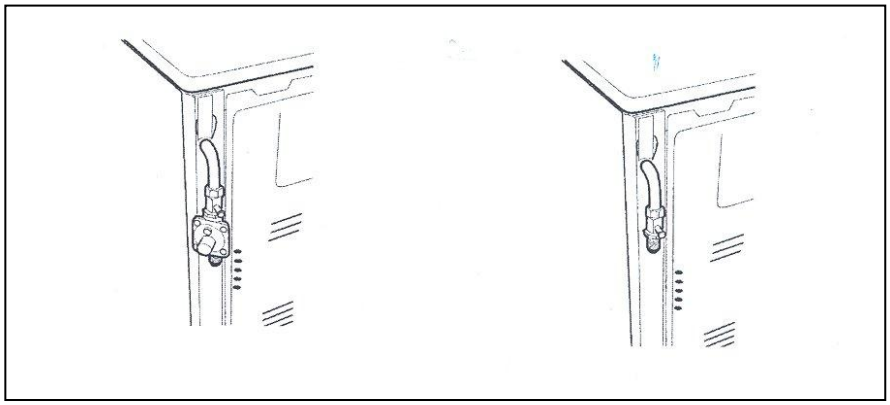

Gas inlet with different leg heights – mm

Min	NG: 560	LP: 645
Ref	NG: 590	LP: 675
Max	NG: 595	LP: 680

Energy consumption					
Burners	Gas type	Pressure (kPa)	Injector (mm)	Mj/hr	Watts
Small	Natural	1.0	0.90	4.00	
	U-LPG	2.75	0.54	3.75	
Medium	Natural	1.0	1.18	7.12	
	U-LPG	2.75	0.70	6.20	
large	Natural	1.0	1.55	12.5	
	U-LPG	2.75	0.92	11.25	
Wok	Natural	1.0	1.65	13.0	
	U-LPG	2.75	0.98	13.0	
Oven/Grill					3000 W

Test the operation of the cooker before leaving

Note: These burners have no aeration adjustment

Check correct operation of the ignitions system and operation of burners individually and in combination. Burner flames should be clear blue, with no yellow tipping. If the burners show any abnormality check that the burners are correctly located. If satisfactory performance can not be obtained, contact the local gas utility.

Important

Before leaving instruct the owner in the use of the cooker it should be expressly noted that we cannot accept any liability for direct or indirect damage caused by wrong connection or improper installation. When being repaired, the appliance must always be disconnected from the mains supply; if required, notify our customer service

Support legs

The cookers are supplied with four transit supports.(One for each corner).

4 support legs ore supplied separately and are fitted on location to the four corners of the lower support frame. Each support leg is pushed over the relevant transit support until flush with the support frame.

Each leg is adjusted by screwing the lower section in or out as required for fitting to a 900mm bench height. For lower bench tops adjust the height as required.The adjustment range for the leg is 150-185mm. With the legs adjusted to a height of 180mm the hob is located 10mm above the horizontal combustable surface, ref. AS5601

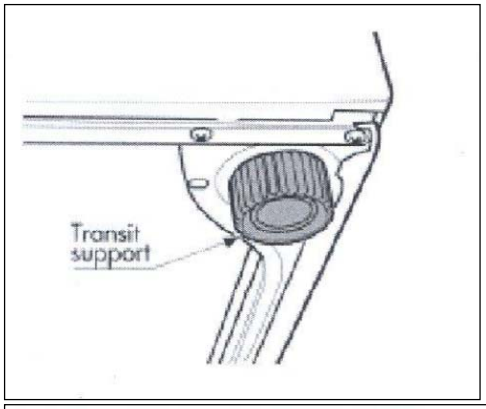

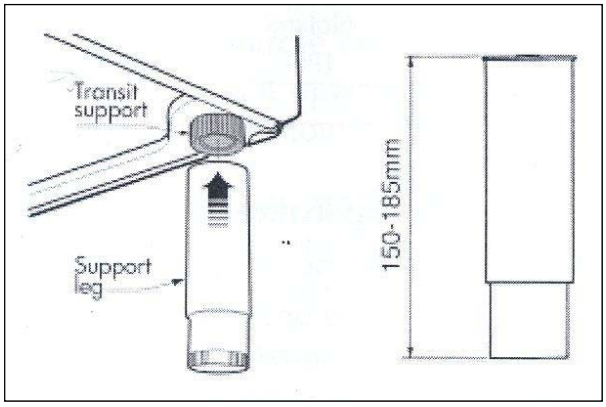

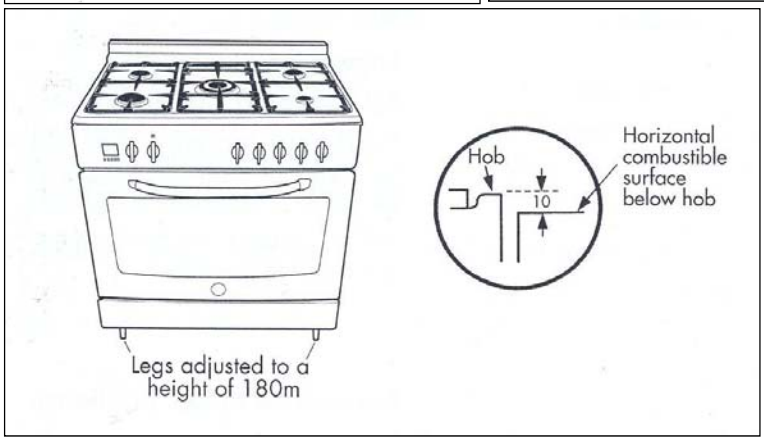

If the legs are not used and the cooker is mounted onto a plinth, fit transit legs to allow for clearance.
Once legs are adjusted to a nominai cooker height of 91 Omm, fit the antitilt restraint bracket.

1. Fit flat strap to rear of cooker at the centre point on lower edge using supplied screw

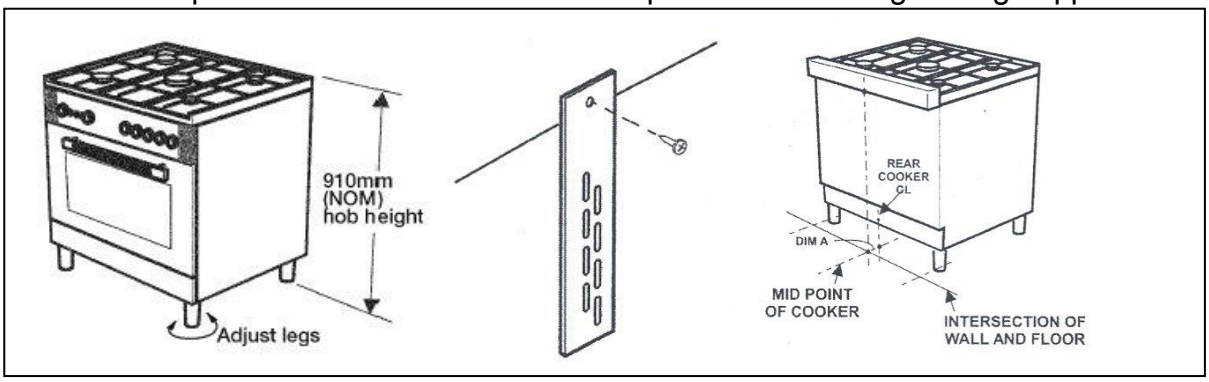

2. Mark centre position of the cooker installed position on floor

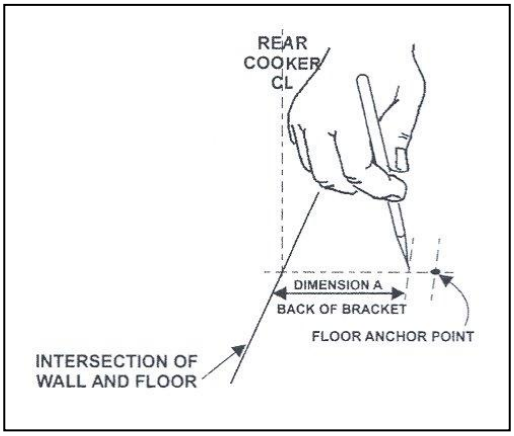

3. Measure from rear most point hob to mount point of strap. (Dimension A), then using Dimension A mark back edge of the bracket on centre line. Use bracket to mark fixing point.

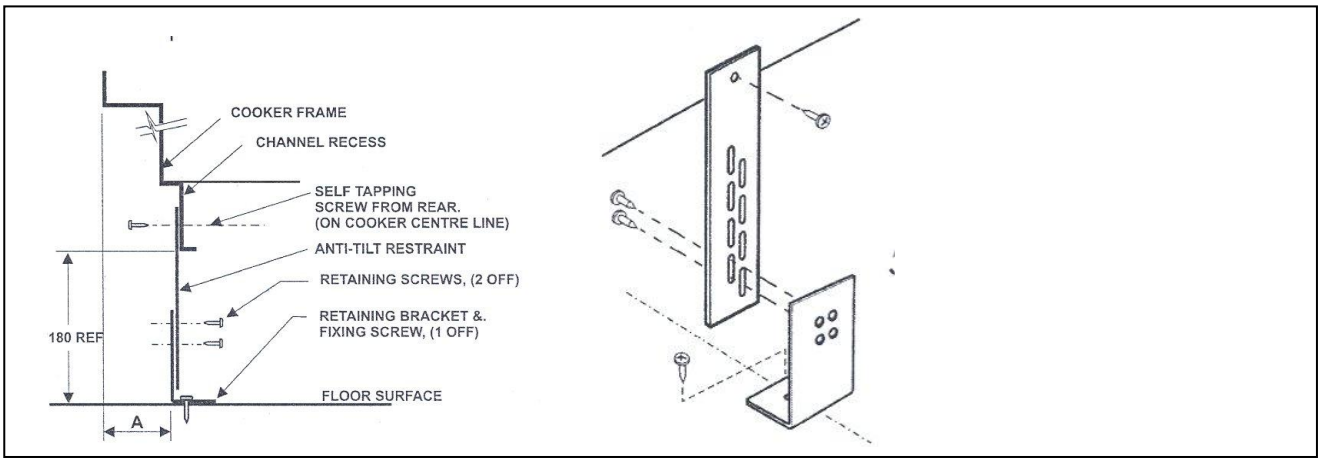

4. Fix restraint bracket to floor at position marked. Use suitable fixing.

Note: For concrete floor, use anchor provided. For other construction use a suitable

fastener.

5. Locate the cooker into the correct and final position. Then from the underside front, secure into position with self tapping screw provided.

WARNING - IN ORDER TO PREVENT ACCIDENTAL TIPPING OF THE APPLIANCE, FOR EXAMPLE BY A CHILD CLIMBING ONTO THE OVEN DOOR, THE STABILISING MEANS MUST BE INSTALLED. REFER TO THE INSTRUCTIONS FOR INSTALLATION

UPSTAND INSTALLATION BAU95EG

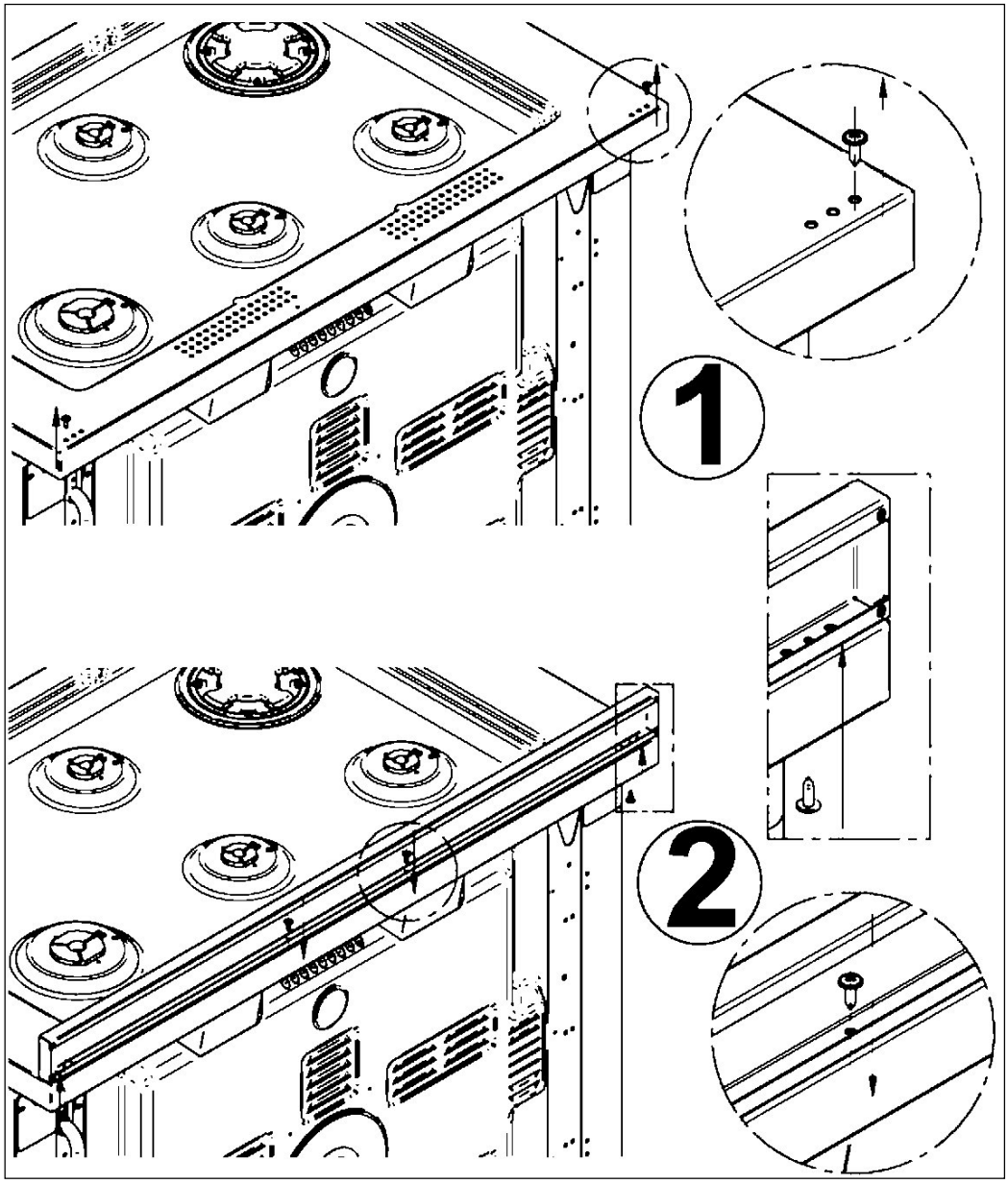

Hob & control panel lay-out

BAU95EG / BAU95EE

1. Electronic clock
2. Timer button
3. Duration of cooking button
4. End of cooking button
5. Advance time button
6. Reduce time button
7. Thermostat indicator light
8. Thermostat control knob
9. Function selector knob
10. Left front burner /zone control knob
11. Left rear burner /zone control knob
12. Central (wok) burner /zone control knob
13. Right rear burner /zone control knob
14. Right front burner /zone control knob

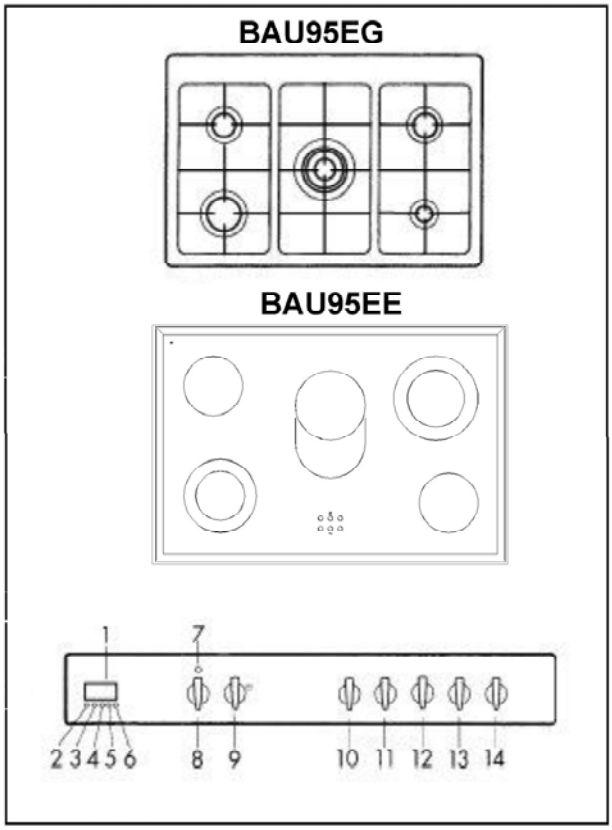

TYPES OF POWER CORDS

The appliance is equipped with a terminal for the electric connection placed behind, which is accessible removing the posterior casing (Fig.5)

The cable of alimentation can be :

BAU95EG

Voltage	Type of cable	cable section
Operation at 240V~	H05V V-F or H05RR-F H07RN-F or H05BB-F	3x1,5 mm2
		3x1,5 mm2

BAU95EE

Voltage	Type of cable	cable section
Operation at 240V~	H05V V-F or H05RR-F H07RN-F or H05BB-F	3x6 mm2
		3x6 mm2
Operation at 380-415V2N~	H05V V-F or H05RR-F H07RN-F or H05BB-F	4x2.5 mm2
		4x2.5 mm2
Operation at 380-415V3N~	H05V V-F or H05RR-F H07RN-F or H05BB-F	5x2,5 mm2
		5x2,5 mm2
		5x2,5 mm2
		5x2,5 mm2

The power supply cable is suitable for appliance operating on 240 V~ / 50Hz

If the supply cord is damaged, it must be replaced by the manufacturer, it's service agent or similar qualified persons in order to avoid hazard.

THREE-PHASE ELECTRIC CONNECTION

Cookers designed to be connected to three-phase systems are usually equipped for single-phase connection at 230V during manufacture and are supplied without the feeding cable. A feeding cable must be installed according to the connection system; refer to the directions shown in table N° 4 to select the type. According to the connection system you have chosen, move the U-bolts on the junction box as shown in Fig 6.

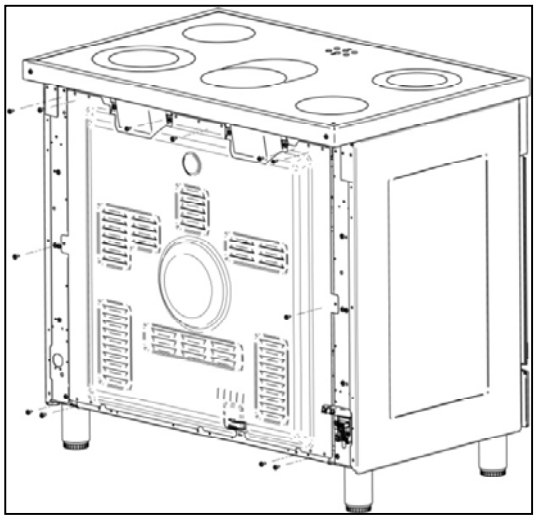

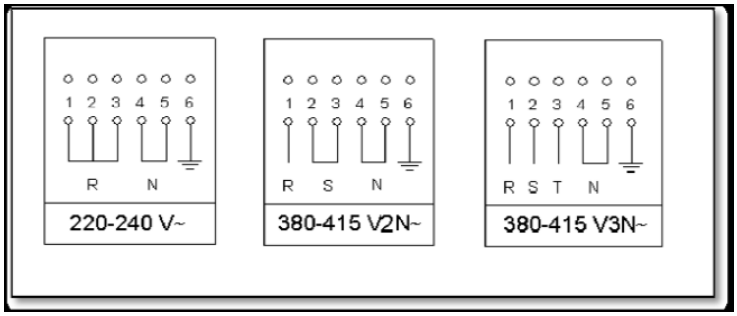

Fig. 5

Fig. 6

USING THE GLASS-CERAMIC HOB BAU95EE

The working table has 5 cooking areas, which differ in power and diameter (Fig.8).
Positions are clearly indicated with screen-printed round areas (see description of the hobs).
The heating process comes inside these areas.
When a worktop hotplate is used for some time, the remaining surface remain hot; a red indicator in the worktop surface light will indicate it.

To obtain best results, the bottom of the hob should be thick and flat.
The diameter of the bottom of the pot (or other container) should be as near as possible the diameter of the burner you are using; using a smaller pot will cause waste of energy due to heat dispersion on the uncovered surface of the plate.
The hob surface and the bottom of the pot must be kept clean.
Following these recommendations will help you save energy.

CERAN HOT PLATE (Fig 8)

TIPE OF PLATE	POWER
A) Ceramic electrical hot plate	left front 700/1700W
B) Ceramic electrical hot plate	left rear 1200W
D) Ceramic electrical hot plate	right rear 1100/2200W
E) Ceramic electrical hot plate	right front 1200W
C) Ceramic electrical hot plate	central 1400/2200W

Residual heat

Each cooking zone is equipped with a device which warns of residual heat (H). After any cooking zone is switched off, a red indication light may appear on the display. This warns that the cooking zone concerned is stili very hot. (Fig.9)

How to use the 5 electrical hot plate ceramic hob:

Each worktop cooking hotplate is controlled by an energy regulator **switch (for 1 or 2 circuit type hotplate).** These allow you to select different power rates in continuous way from the lower position "0" (plate always "off") to the higher position "3" (plate always "on"; double circuit hotplates control switch (Fig. 10) allow to reach the full power rate of the related double circuit hotplate by turning the related knob in 2 nd circuit position for 1-2 sec. and the releasing it in pos.3 (Fig. 11)

Directions showing the hotplate and related control knob is indicated on the control panel of the appliance.
A red indication light on the worktop surface will indicate You that some worktop hotplate is turned on
Once the boiling level has been reached, lower the temperature and let the food simmer.
Experience will guide you in understanding how long to simmer, but obviously this also depends on the food and the kind of pot you are using. Proper use will permit you to save time and energy.

WARNING:
Under no circumstance use aluminium foil or plastic containers to hold the food while cooking on a glass-ceramic hob.

WARNING:
Do not touch the cooking area as long as the light indicating residual heat on the glass-ceramic hob, is "on"; this indicates that the temperature in the relative area is still high.

WARNING:
Your glass-ceramic hob is thermal shock resistant and resistant to both heat and cold.
If you drop a heavy pot on your hob it will not break.
On the contrary, if a hard object, such as the salt shaker or the spice bottle strikes the edge or the corner of the hob, the hob may break.

WARNING: never use the glass-ceramic hob as support surface.

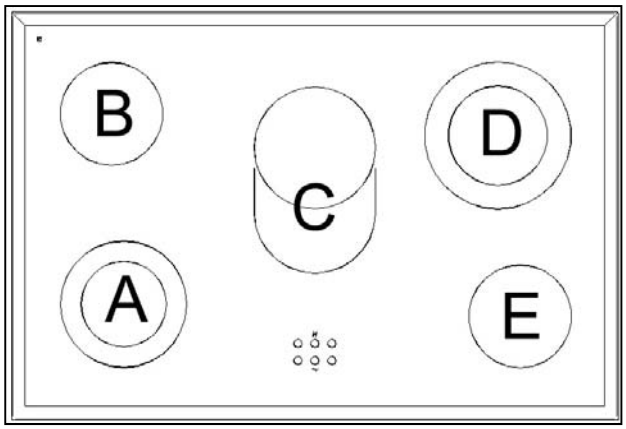

Fig. 8

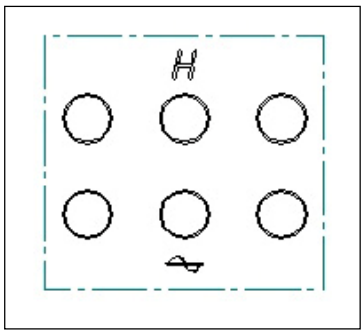
Fig. 9

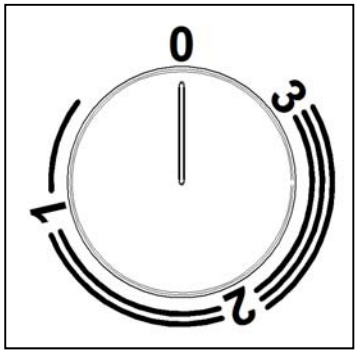

Fig. 10

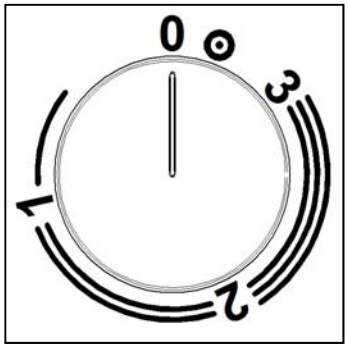

Fig.11

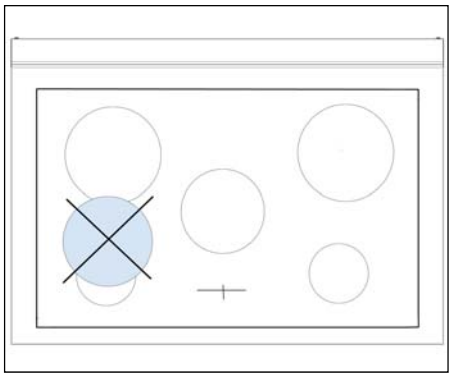
Fig. 12

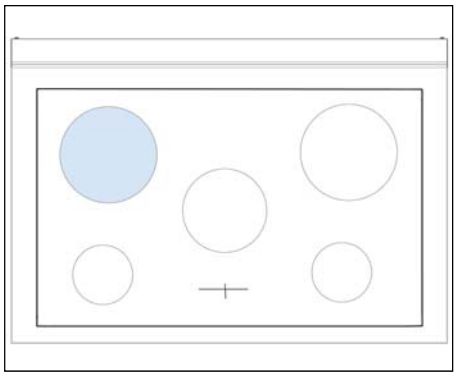
Fig.13

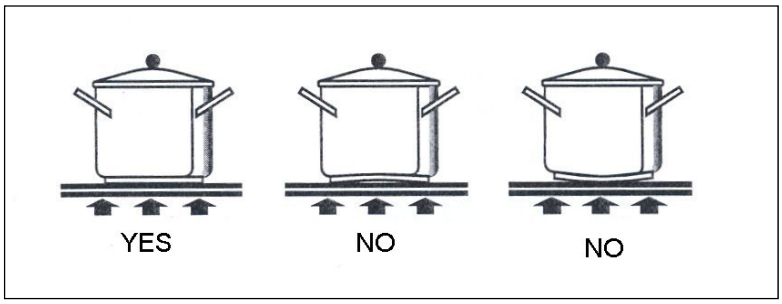

Fig.14

Cooktop burner operation.

For cookers fitted with the optional glass lid the glass lid must always be in the open position when the cooktop burners are operating.

First time use

Thoroughly clean cooktop with warm soapy water prior to first use.

Cooktop burner operation

The individual burner position on the cooktop is indicated by a graphic placed above the burner control knob. Two further graphics indicated the 'full on' and 'turn down ' positions.

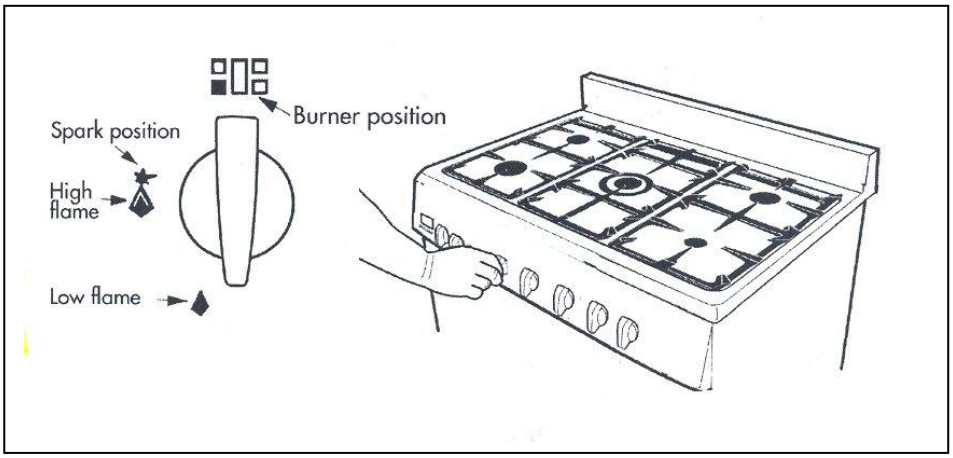

Ignition

1. To operate the individual cooktop burners depress the appropriate control knob and turn anti-clockwise to the spark symbol. Push to activate the electronic ignition.
2. Once flame is established turn the knob to the desired setting.
3. If the flame goes out repeat the procedure.

NOTE: if the burner does not ignite within 5 seconds, wait 5 minutes before reigniting.

Cooktop burner adiustments

The control knob is used to adjust the flame of the gas burner.
'High flame' graphic = highest output
'low flame' graphic = lowest output
Use 'High flame' setting to bring the pan to the boil, then adjust the flame to maintain the required pan temperature. Burner flames should be clear blue, with no yellow tipping. If the burners show any abnormality check that the burner heads are correctly located. If satisfactory performance cannot be abtained after consulting the trouble shooting guide, contact the authorised service provider. Please state the cooker model number to the service agent. The model number is stated on the data plate. The data plate is located on the inside of the oven door, centre bottom. A copy of the data plate is also reproduced on the last page of this booklet

Ventilation

The use of gas burners leads to the production of heat and moisture in the kitchen. For this reason make sure that the room is properly ventilated. Keep ventilatin openings, such as windows, open or provide a mecnanical ventilation device (e.g. a range hood of overhead exhaust fan)

Electronic clock

To program the cooker press the desired function button and adjust the required time using the **+** and **-** buttons

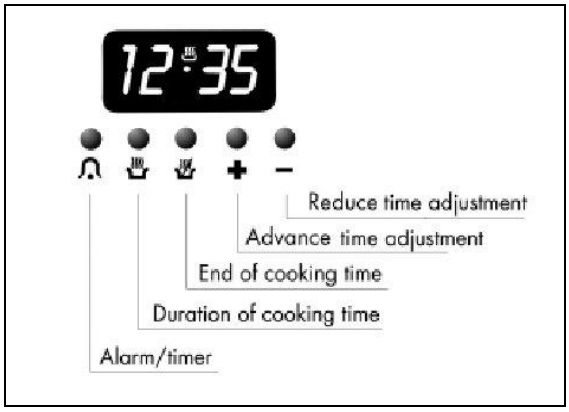

Setting time of day

When first switching on power to the appliance, or after a power failure, the timer display flashes 0.00. To set the correct time of day press the and the symbols simultaneously and adjust the time using the **+** and **-** buttons

Oven will not switch on/to clear a program
If the oven will not switch on and the '**A**' symbol is illuminated on the display, a program is stili running. To clear a program press the and the symbols simultaneously. The '**A**' symbol will switch off and the only will be illuminated.

Manual operation

1. T urn the function selector control knob to the required mode.
2. Then turn thermostat control knob to the desired temperature.

NOTE: only the symbol should be illuminated

Manual operation with timer

1. Turn the function selector control knob to the required mode.
2. Then turn thermostat control knob to the desired temperature.
3. Press the symbol and adjust the required cooking time using the **+** and **–** buttons.

NOTE: the and the '**A**' symbols should be illuminated.
At the completion of the cooking time an audible signal will sound. To turn off the signal press the symbol.

Semi automatic operation with end cooking.
In this mode the oven will turn itself oH when the preset end of cooking time is reached.

1. Press the symbol and using the **+** and **-** buttons adjust the ti me you wish the cooking to stop
2. Turn the function selector control knob to the required mode.
3. Then turn thermostat control knob to the desired temperature.

NOTE: the 'A' and the symbol should be illuminated.
At the conclusion of the cooking time the signal will sound and the 'A' symbol will flash. The will turn off and the oven will also turn off. To stop the signal press the button.

Automatic operation with end cooking
In this mode the oven is programmed to start and stop at a predetermined time.

1. Press the symbol and using the **+** and **-** buttons adjust the time you wish the cooking to stop.
2. Press the symbol and adjusting the **+** and **-** buttons adjust the cooking duration time.
3. Turn the function selector control knob to the required mode 4. Then turn thermostat control knob to the desired temperature.

NOTE: The oven will turn on at the 'end of cooking' time minus the 'duration of cooking time'. If the start of the cooking time is still ahead of the current time the '**A**' symbol only will be illuminated.
At the conclusion of the 'end of cooking time' the signal will sound and the '**A**' symbol will flash. The will turn off and the oven will also turn off. To stop the signal press the button.
'The time to run' can be verified at any time by pressing the appropriate button.

To clear a program

To clear a program press the and the symbols simultaneously.

Use of cooktop burners
For safety and economie gas usage you should always use the correct pan on the correct burner. Flames should not protrude beyond the base of the pan. You will save energy, time and money by always placing the correct pan size on the correct gas ring

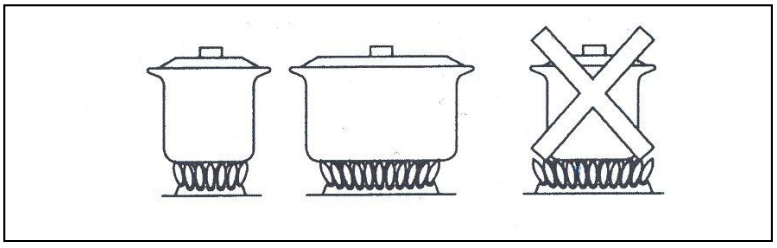

Oven /grill operation

Accessories
1 wire shelves
1 enamel baking tray

Foods being grilled must be monitored at all times, especilally high fat content foods such as sausages, chops, ect.

First time use
Thoroughly clean the appliance and accessories with warm soapy water before using them for the first time. Operate the oven for about 30 minutes at 200°C on fan forced or fan assisted in order to eliminate any odours from all oven elements.

Oven /grill use for models

Thermostat and function selector control knobs

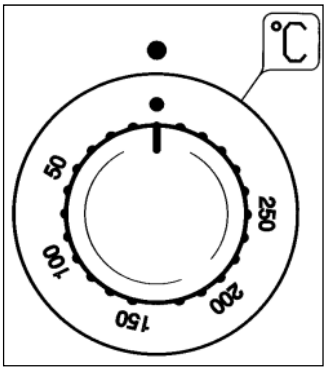

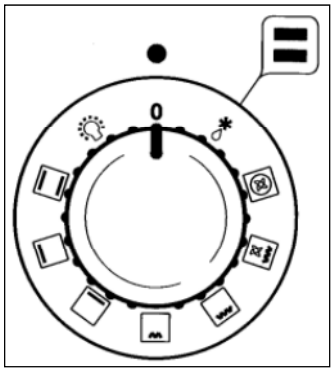

Cooling fan operation
The cooling fan operates when the oven is switched on and will continue to operate until the oven is switched off. The cooling fan ensures that the control knobs and the surrounding fascia are always cool to touch.

Oven heat distribution
The electric oven is heated by 4 elements; one concealed in the bottom of the oven, two against the roof of the oven and one circular element around the fan. The function selector control knob controls the elements relative to the graphic symbols on the control panel
The elements cycle on and off as required to reach and maintain the set temperature.
The oven and grill functions are both contained within the one oven comportment and can be used in conventional mode or with ths fan.
In order to operate the grill or the oven, both the thermostat control knob and the function selector control knob must be activated. Turning only one control knob will not have any effect on the oven except to turn on the oven light or the electric fan. The thermostat controls the oven at settings up to 250°C.

Switching the oven ON

1. Turn the function selector control to the required cooking mode. The orange 'power on' thermostat indicator light illuminates.
2. Set the temperature control to the required cooking temperature. The selected temperature will be maintained automatically.

The orange thermostat indicator light illuminates when the oven is first turned on, and extinguishes when the required temperature is reached. The indicator light will cycle ON and OFF as the element cycles ON and OFF to maintain the oven temperature.

Grill operation

Note: due to the operation of the cooling fan, all methods of grilling in this oven require the oven door to be closed during grill operation.

When the grill is used in the following 'fan forced' mode set the thermostat knob no higher than 175°C, which is between the150°C and 200°C setting, to avoid overheating the front of the appliance.

Indicates that both the top external element and the inner grill element, as well as the fan, are turned on. In this fan forced mode the oven door needs to be closed.

This fan forced mode is a special function to ensure excellent grilling. Place the oven shelf in the middle position and the oven tray should be inserted at the bottom.

Shelf positions

The oven features 5 shelf positions. The levels are counted from top to bottom.

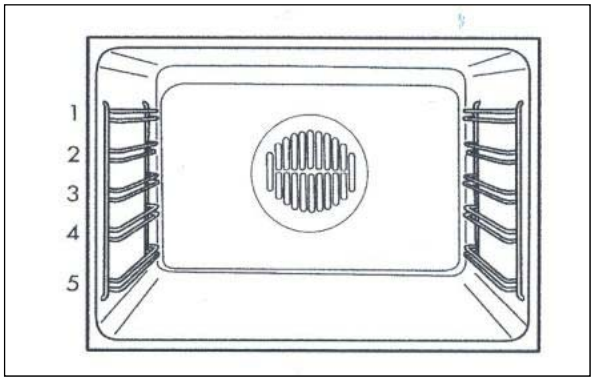

Description of oven functions

When the function selector control knob is set to one of these nine positions the orange thermostat indicator light activates, indicating that the oven is being energised and the light turns on and off as the elements cycle on and off to maintain the required temperature.

The cooking chart lists the shelf positions for specific types of food. Personal experience will help determine any variations in the values reported in the table. In any case, it is recommended to follow the instructions of the specific recipe used.

Oven light

Oven light will also be activated on all other cooking functions.

Conventional cooking
Thermostat setting from 50°C – 250°C.
Moderate oven 180°C.
This mode uses upper and lower heating elements to cook. Cooking is possible on one shelf position only and food should be placed towards the centre of the oven on shelf position 3. This mode of cooking is suitable for:
Baking rich fruit cakes
Pavlova
Meringues
Souffles
Casseroles
Large cakes

Upper element
Thermostat setting from 50°C – 200°C
In this mode heat is provided from the upperl element only. Food should be placed towards the centre of the oven and cooking should be done on one level only. This function is ideai for finishing foods which require additional surface cooking such as moist cakes.

Lower element
Thermostat setting from 50°C – 200°C.
In this mode heat is provided by the lower element only and food should be placed on shelf 4 or 5. Ideal for foods which require additional cooking of the base such as:
Quiches
Apple pies
Pizzas

Radiant grilling
Thermostat setting from 50°C – 175°C
These modes use radiant heat provided by the centre part of the grill element and centre plus outer element respectively. Shelf positions 2 or 3 should be used. Ideal for quick browning of small quantities of food such as cheese on toast.
Always use the grill pan and wire grid together.
Turn the food after approximately two thirds of cooking time.
Lightly brush food with oil to avoid it sticking.
Always monitor food being grilled in these two modes.

Fan grilling
Thermostat setting from 50°C – 175°C
In this mode both grill elements as well as the fan are activated. The heat generated by the grill elements is evenly distributed throughout the oven interior, eliminating the need to turn the food. This mode can be used for grilling meat and vegetables. At 170°C, this mode will also give an effect similar to spit roasting, especially for poultry or pork where a crisp skin is desired. It is also ideal for foods which require additional browning such as au gratin or pork crackling.

Fan forced cooking
Thermostat setting from 50°C - 250°C.
Moderate oven 170°C.
In this mode the rear circular heating element provides heat whilst the fan distributes the heat evenly throughout the oven interior. It is possible to cook several dishes simultaneously on different shelves and food can be placed on any shelf position. Meat cooked in fan forced mode will brown on all sides, eliminating the need for a separate rotisserie function. It is particularly suitable for roasting cuts of meat weighing more than 150g. Place meat on the wire grid in the universal pan and roast at approximately 170°C. Aavantages of this mode are:
Shorter pre-heating time
Cooking with lower temperatures
Shorter cooking times
Ideal for all multi-level cooking including:

Bread
Roasts
Cakes
Pastries

Defrosting
Thermostat setting 0°C
In this mode the fan circulates cold air inside the oven. In this way frozen food can be evenly defrosted. For best results when defrosting place the food on the wire rack in the universal pan

Oven cooking tips

Preheat oven until the temperature indicator light extinguishes. (The indicator light will cycle on and off as the element cycles on and off to maintain the oven temperature).
Refer to cooking chart for shelf positions. Personal experience will help determine any variations in the positions reported in the chart. In any case, it is recommended to follow the instructions of the specific recipe used.
Open door as little as possible during operation
When opening the oven door during operation turn to a non fan function to minimise heat loss
If necessary to cover food with foil or baking paper whilst cooking in fan mode, ensure that the foil or paper is firmly secured.
For easy viewing and a more even cooking result bring the dishes and trays forward to the front of the oven shelf. Avoid placing food too dose to rear of oven.
For even heat circulation ensure that dishes and trays do not touch each other or the sides of the oven. Best results when baking, roasting and multi level cooking will be obtained by cooking with the fan in operation
Do not place foil, baking trays, dishes or any other items directly on the base of the oven
Note: When oven is operating the glass door will become hot

Trouble shooting guide

Problem	Possible cause	Action
Burners does not light	Power to appliance turned off	Turn on power supply
Cooktop burner difficult to light	Burner cap damp or incorrectly positioned	Dry and reposition cap
	Spark ignitor clogged with grease	Clean ignitor
	Burner ports blocked	Clean ports
	Spark igniter does not function	Phone service number for service or advice
Grill element/browner smoking when on	Top of oven compartment soiled	Clean top of oven compartment
Food is not cooking to expectation	User may still be using settings of previous cooker - all ovens have different characteristics	Check cooking chart - consumer will become familiar with use If problem persists phone service number for advice
Food cooking too quickly	Oven temperature set too high	Check oven chart, lower temperature
	Pan used larger than recipe required	Allow less time or use smaller pas
	Thermostat too high - faulty	Phone service number for service or advice
Food taking too long to cook	Opening oven door too frequently or far too long	Avoid opening door and minimise time open
	Oven not preheated sufficiently	Allow to preheat, especially far high temperature cooking
	Temperature set too low	Check chart and / or raise temperature
	Food was chilled or partially frozen	Allow to thaw completely or allow longer time for cooking
	Heat loss from oven	Phone service number for service or advice
	Thermostat too low - faulty	Phone service number for service or advice
Food is cooking unevenly	Tray or pan pushed too far to the back or sides of oven	Allow 5 cm airflow all around Use fan setting
	Tray too large	Use smaller tray
	Tray or oven overloaded	Reduced items on tray or number of trays in oven
	Oven temperature too hight	Reduce temperature slightly
Cakes not cooked through to centre	Temperature too high	Reduce temperature
	Oven overloaded	Cook fewer items
	Incorrect shelf position	Check cooking chart
Food pale on top	Temperature too low	Raise temperature - refer to chart
	Insufficient cooking time	Increase cooking time
	Sides too high on cake tin	Use smaller tin
	Incorrect position	Refer to cooking chart
	Tray too large	Allow 5 cm airflow around items
Cake cracking on top	Oven too hot	Reduce temperature
	Batter too th ick	Check recipe or add more liquid
Minute minder does not ring	Control knob has not been sufficiently wound up	Even if setting for a short time it is recommended to wind the knob through 360° (to 60 mins) then turn back to the required time

Cleaning

Cleaning hob

Once the appliance is cold, clean it with a sponge and soapy water. Remove any spills immediately. This will avoid unnecessary effort later

Allow burners and trivets to cool down before cleaning them.

The burners and trivets must be cleaned regularly to keep them in good condition. This is done by submerging them in soapy water and scrubbing them with a non-metal brush to keep the ports and slots free from obstructions so they give a perfect flame. Dry the burner caps and trivets whenever wet or damp. Do not wash the burner caps and trivets in a dishwasher.

After cleaning and drying ensure that the burner heads and caps are replaced correctly on the burner body

For cookers fitted with a stainless steel hob the high temperatures generated by using the wok burner may cause the stainless steel hob of your hotplate to become discoloured over time. THIS IS NORMAL. Clean the hob with a product suitable for cleaning stainless steel

Never use abrasive products, sharp objects, steel scouring pads, knives, etc., to remove stubborn food remains from the hob surface, trivets, burners and oven interior

Do not allow acidic products such as vi negar, lemon juice etc., to come into contact with the hob

Cleaning oven interior

Clean the oven enamelled floor, wire shelves and shelf supports with hot detergent suds. This oven is fitted with self cleaning linings on the roof, sides and back of the oven. The liners are covered with a special micro-porous enamel that absorbs and removes fat residue during baking. Should any liquid fat splatter onto the liners, self cleaning action may not be adequate. In this case the liners may be wiped with a damp sponge. Mild detergent may be used but no chemical cleaners. After this, heat the oven to the maximum temperature for a period of 30 minutes. If the stains persist wait until the oven has cooled down and repeat the above precedure. Important: always clean the enamelled surfaces and wire components prior to starting the 30 minute heat cleaning cycle.

It is recommended that the oven interior be cleaned regularly as excessive build-up of fat can become a fire hazard.

Cleaning oven shelf supports

To remove the shelf supports remove the knurled knobs either side, lift the wire rack and swing forwards

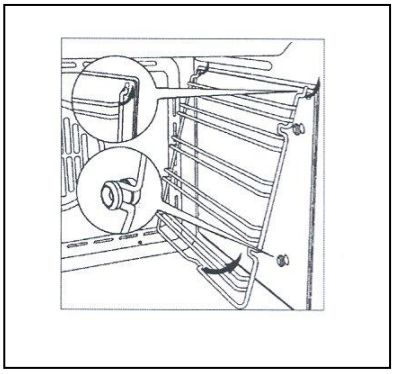

Cleaning oven glass door

The oven door may be removed for cleaning. To remove the oven door follow the steps below:

1. Open the door fully
2. Lift the two levers forward as shown in figure below left
3. Close the door as far as the first stop (created by the raised levers).
4. Lift the door upwards and outwards to remove it from its mounting as shown in figure below right.
5. To replace the door, fit the hinges on their mountings and lower the levers
6. Close the door.

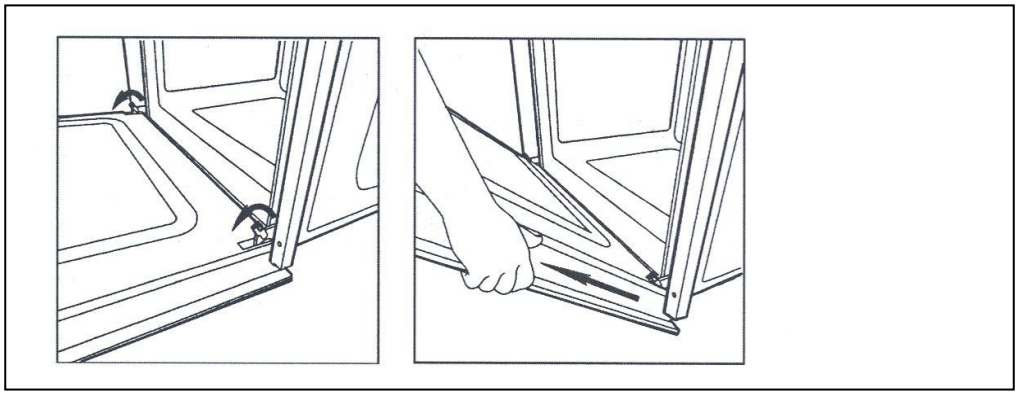

Use a window cleaner to clean the exterior glass panel.

Replacing the oven light bulb

Type: E 14, 25W, heat resistant to 300°C.

You may obtain this bulb from our service department

1. Disconnect the appliance from the main electricity supply.
2. To prevent damage place a teacloth in the bottom of the oven.
3. Unscrew the glass cover of the light.
4. Unscrew the old lightbulb and replace it with a new one.
5. Replace cover
6. Reconnect the power supply.

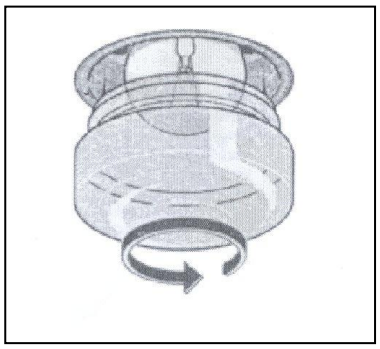

Service information

Service and maintenance must only be carried out by an authorised person
This appliance shall not be modified.
Always disconnect the gas supply and power before servicing the cooker.
After service always check connections for gas soundness at connections with soapy water. NEVER use a naked flame to check for leaks.

To remove the upstand (for cookers fitted with upstand)
1. Pull cooker forward
2. To remove the upstand retaining brackets undo the 2 top and 2 rear retaining screws securing each bracket.
2. Lift the upstand from the cooker hob.

To clean or replace a cooktop burner injector
1. Remove pan support, burner cap and burner head.
2. Using a 7mm socket spanner unscrew and clean or replace the cooktop burner's injector.
3. Replace burner head, cap and pan support. Ensure that the burner head and cap are in the correct position.

Access to the under hob area
Pull cooker forwards to gain access to the rear of the cooker
1. Remove upstand
2. Remove pan supports, burner caps and burner heads
3. Using a torx T20 head driver remove the screws securing the burners to the hob. 2 per boiling burner and 4 for the wok burner.
4. Remove the lower 2 screws of each upstand bracket
5. lift hob at rear and slide out of position.

Wiring diagrams BAU95EE

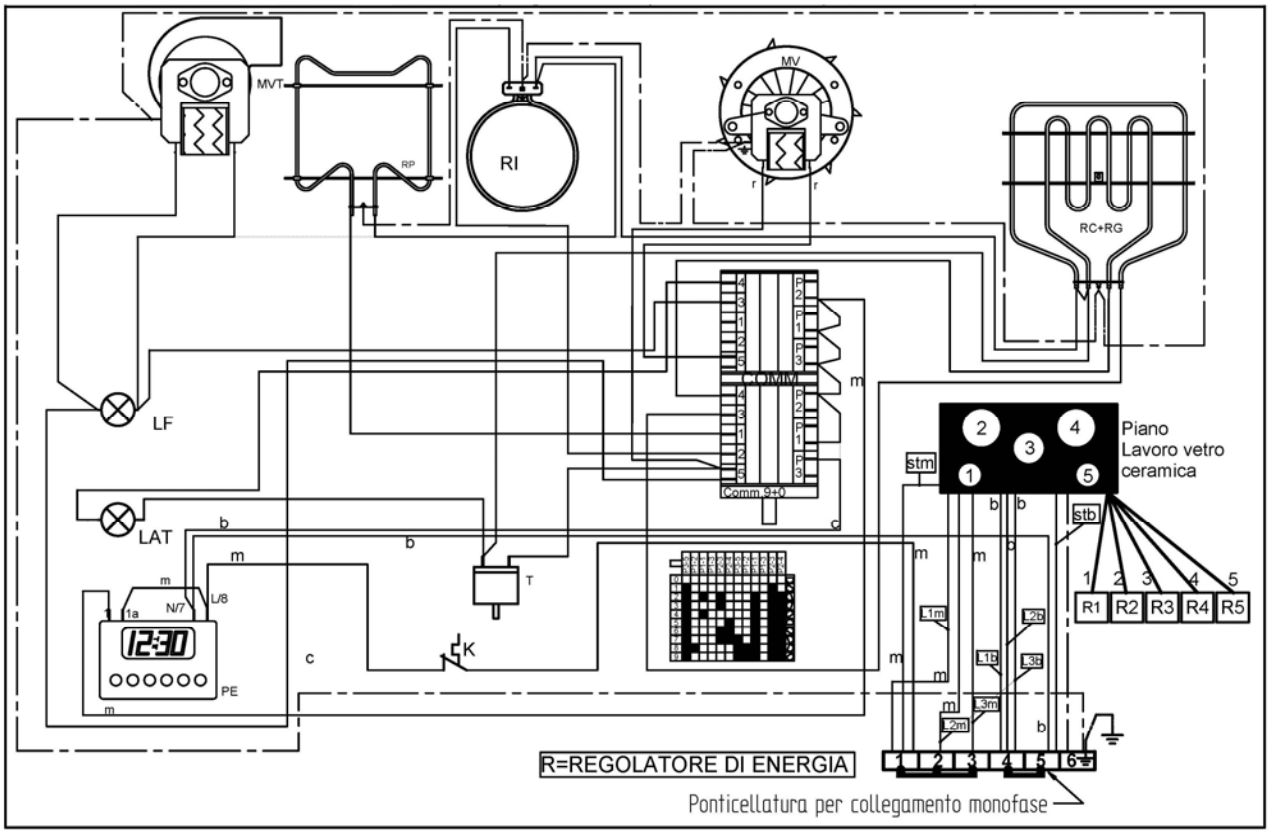

A copy of those diagrams is situated on the back panel of the cooker.

Wiring diagrams BAU95EG

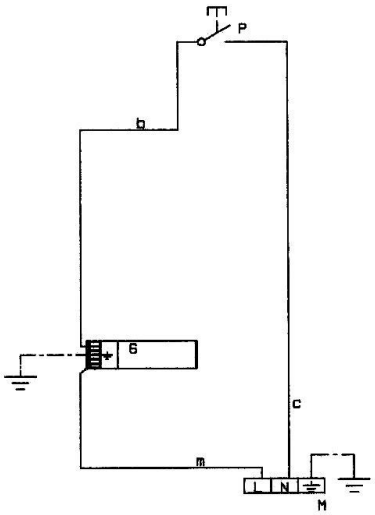

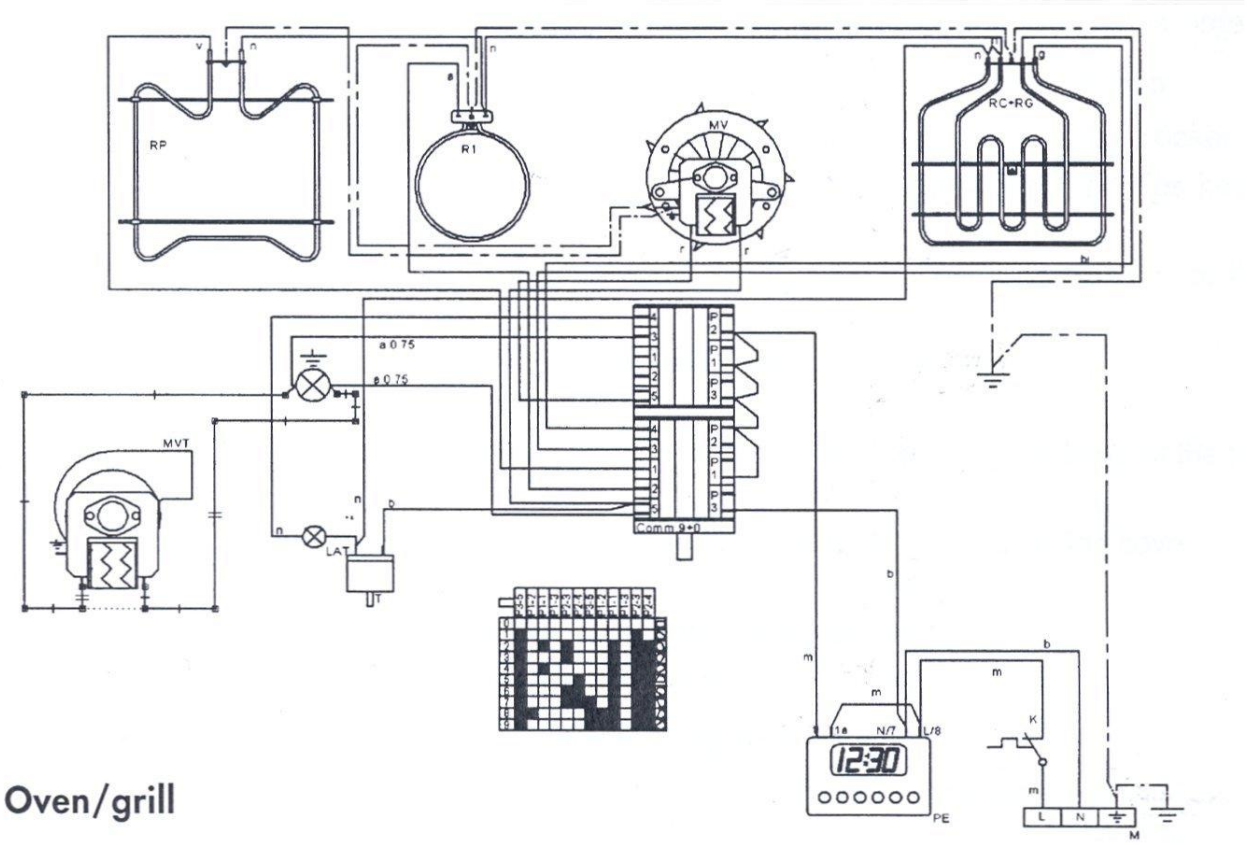

A copy of those diagrams is situated on the back panel of the cooker.

Data plates

The data plates reproduced below cover all three cookers. You will find your particular model number on the data plate attached to the inside of the oven door, centre bottom. Always quote your model number when requesting a service call.

note:

Refer to cover page for duplicate data label applicable to your appliance.

3100141