Owner's Manual

Models: DVF1200, DVF1500 & DVF1800

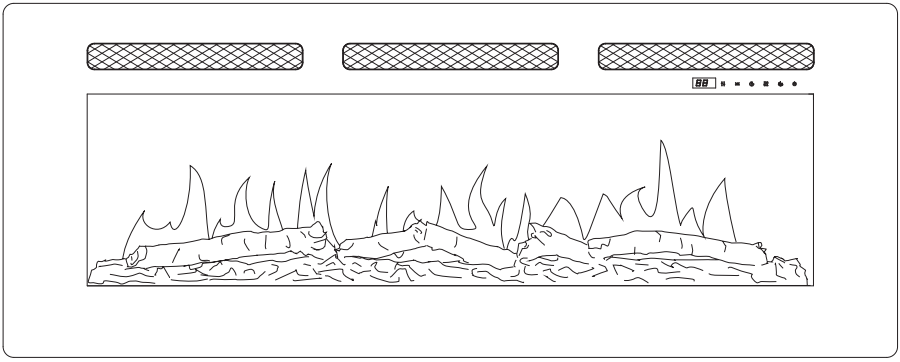

CONSUMER SAFETY INFORMATION: PLEASE READ THIS MANUAL BEFORE INSTALLING AND OPERATING THIS APPLIANCE. FAILURE TO FOLLOW THESE INSTRUCTIONS MAY RESULT IN A POSSIBLE ELECTRIC SHOCK, FIRE HAZARD, AND/OR INJURY AND WILL VOID THE WARRANTY.

This instruction can be also downloaded from our company website.

To view the full line of Dimplex products,
visit www.dimplex.com.au
or www.dimplex.co.nz

V 1.1

Table of Contents

Welcome 3

IMPORTANT INSTRUCTIONS..... 4

Specifications 6

Installation 7

Operation..... 16

Maintenance..... 19

Troubleshooting..... 21

Warranty 22

Technical Support..... 24

Conventions used in this manual:

! **NOTE:** Procedures and techniques considered important enough to us.

CAUTION: Procedures and techniques which, if not carefully followed, will result in damage to the equipment.

WARNING: Procedures and techniques which, if not carefully followed, will expose the user to the risk of fire, serious injury, or death.

Welcome

Thank you and congratulations for choosing to purchase an electric fireplace from Dimplex, the world leader in electric fireplaces.

Please record your model and serial numbers below for future reference: model and serial numbers can be found on the Model and Serial Number Label of your fireplace.

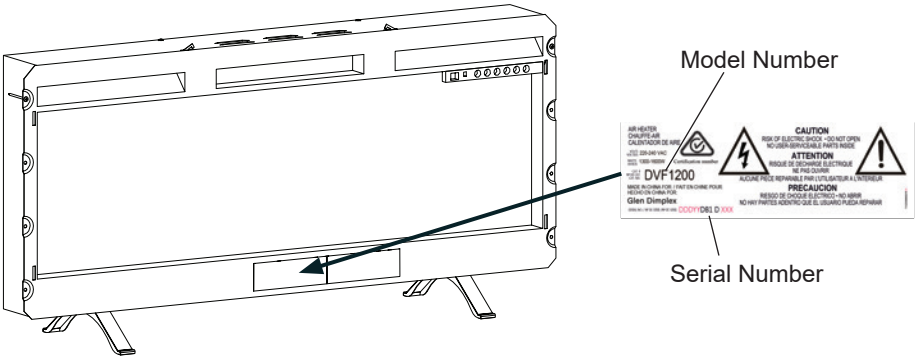

CAUTION: Read all instructions and warnings carefully before starting installation. Failure to follow these instructions may result in a possible electric shock or fire hazard and will void the warranty.

STOP **NO NEED TO RETURN TO THE STORE**

Questions with operation or assembly? Require Parts Information?
Product Under Manufacturer's Warranty?

Contact us at

1300 556 816 or www.dimplex.com.au for Australia

09 274 8265 or www.dimplex.co.nz for New Zealand

For Troubleshooting and Technical Support

In order to better serve you, please have your model and serial numbers ready or register your product online before calling (see above).

⚠ IMPORTANT INSTRUCTIONS

Read this manual before attempting to install or use the electric fireplace. Always comply with the warnings and safety instructions contained in this manual to prevent personal injury or property damage.

When using electrical appliances, basic precautions should always be followed to reduce the risk of fire, electric shock and injury to persons, including the following:

• Children of less than 3 years should be kept away unless continuously supervised.

• Children aged from 3 years and less than 8 years shall only switch on/off the appliance provided that it has been placed or installed in its intended normal operating position and they have been given supervision or instruction concerning use of the appliance in a safe way and understand the hazards involved. Children aged from 3 years and less than 8 years shall not plug in, regulate and clean the appliance or perform user maintenance.

• If the supply cord is damaged, it must be replaced by the manufacturer, its service agent or similarly qualified persons in order to avoid a hazard.

• WARNING: In order to avoid overheating, do not cover the heater.

• Do not use this heater in the immediate surroundings of a bath, a shower or a swimming pool.

• The heater must not be located immediately below a socket outlet.

• Do not use this heater with a programmer, timer, separate remotecontrol system or any other device that switches the heater on automatically, since a fire risk exists if the heater is covered or positioned incorrectly.

• There is possible danger of installation close to curtains and other combustible materials.

• CAUTION — Some parts of this product can become very hot and cause burns. Particular attention has to be given where children and vulnerable people are present.
• Do not use this heater if it has been dropped.

• Do not use if there are visible signs of damage to the heater.

• Use this heater on a horizontal and stable surface, or fix it to the wall, as applicable.

⚠ SAVE THESE INSTRUCTIONS ⚠

⚠ IMPORTANT INSTRUCTIONS

• CAUTION: In order to avoid a hazard due to inadvertent resetting of the thermal cut-out, this appliance must not be supplied through an external switching device, such as a timer, or connected to a circuit that is regularly switched on and off by the utility.

• This appliance can be used by children aged from 8 years and above and persons with reduced physical, sensory or mental capabilities or lack of experience and knowledge if they have been given supervision or instruction concerning use of the appliance in a safe way and understand the hazards involved. Children shall not play with the appliance. Cleaning and user maintenance shall not be made by children without supervision.
A disconnecting switch incorporated in the fixed wiring shall be provided.

CAUTION
RISK OF ELECTRIC SHOCK
DO NOT OPEN
NO USER-SERVICEABLE PARTS INSIDE

Specifications

Electrical

Voltage:	220V~240V 50Hz
Watts:	1 300~1 600 Watts
Amps:	6-7 A
Wiring:	Plug-In
Bulb Type:	LED

Dimensions

DVF1200

Width:	1046 mm
Height:	460 mm
Height with feet:	547 mm
Depth:	133 mm
Depth with feet:	279 mm

Weight

18.5 kg

DVF1500

Width:	1318 mm
Height:	460 mm
Height with feet:	547 mm
Depth:	133 mm
Depth with feet:	279 mm

Weight

28.9 kg

DVF1800

Width:	1626 mm
Height:	460 mm
Height with feet:	547 mm
Depth:	133 mm
Depth with feet:	279 mm

Weight

35.3 kg

Installation

GROUNDING INSTRUCTIONS

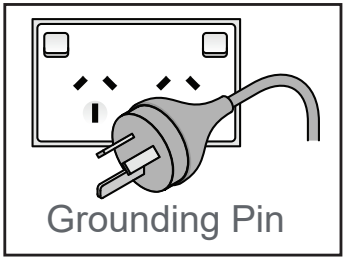

- This product is equipped with a cord that has an equipment-grounding conductor and a grounding plug. The plug must be plugged into an appropriate outlet that is properly installed and grounded in accordance with all local codes and ordinances.
- This heater is for use on 220-240 volts.
- A 10 Amp, 220-240 Volt circuit is required. A dedicated circuit is preferred, but not essential in all cases. A dedicated circuit will be required if, after installation, the circuit breaker trips or the fuse blows on a regular basis when the heater is operating. Additional appliances on the same circuit may exceed the current rating of the circuit breaker.

WARNING: Electrical outlet wiring must comply with local building codes and other applicable regulations to reduce the risk of fire, electric shock, or injury to persons.

Package Contents

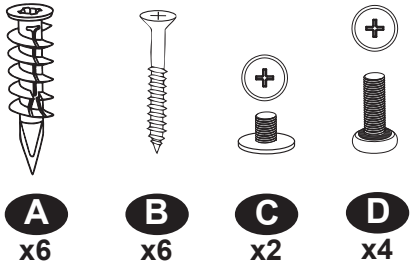

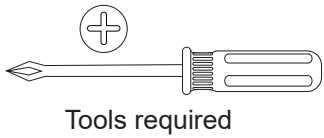

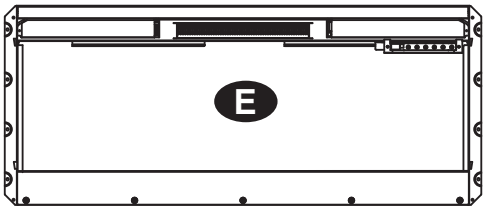

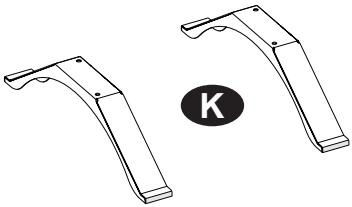

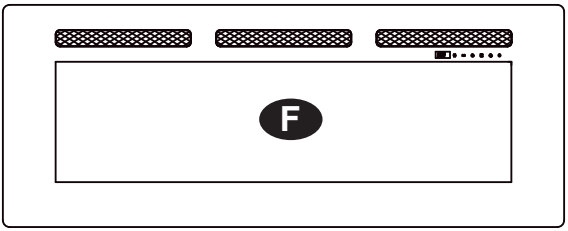

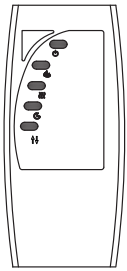

IN-WALL INSTALLATION

Cabinet - mm

Model	A	B	C
DVF1200	1057	165	470
DVF1500	1331	165	470
DVF1800	1636	165	470

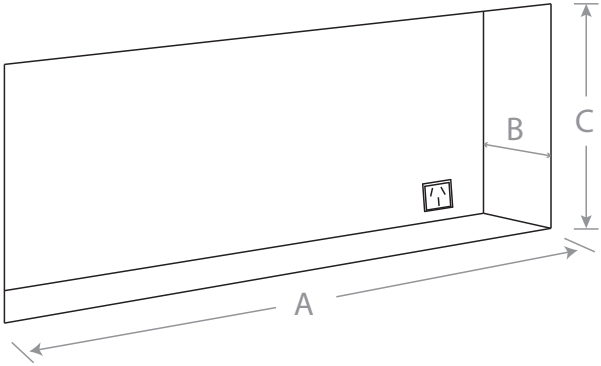

Firebox - mm

Model	D	E	F
DVF1200	1046	119	460
DVF1500	1318	119	460
DVF1800	1626	119	460

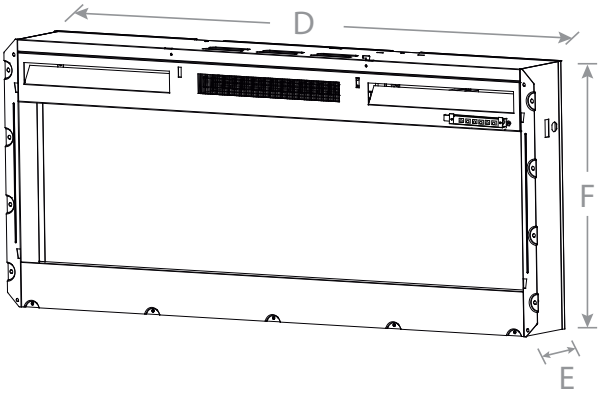

INSTALLATION HEIGHT

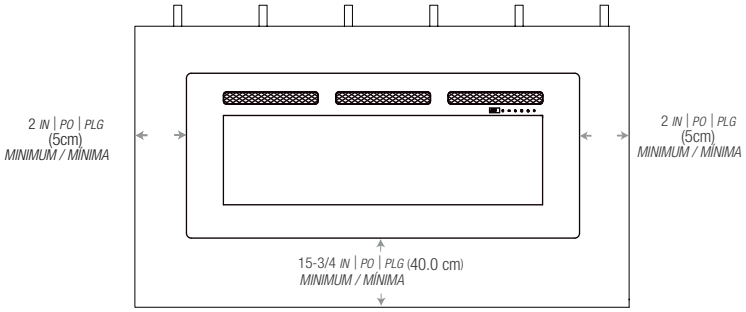

IN-WALL INSTALLATION

1

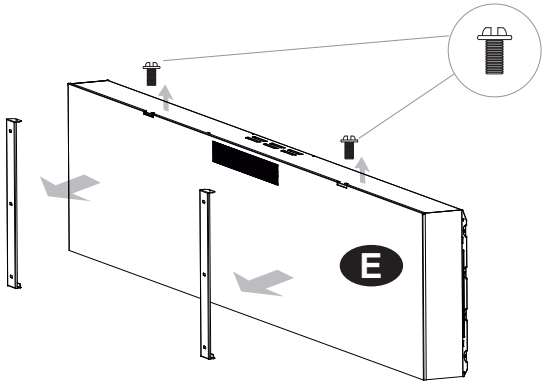

2

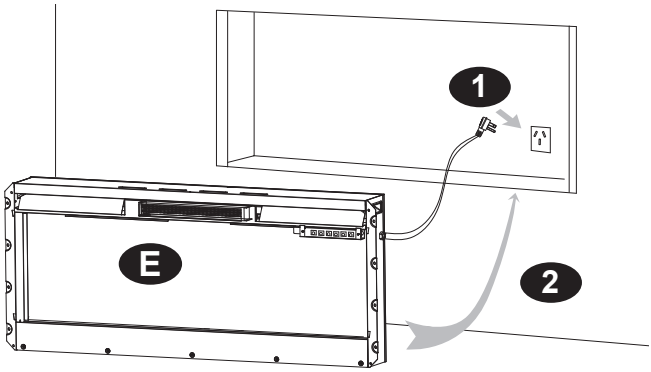

3

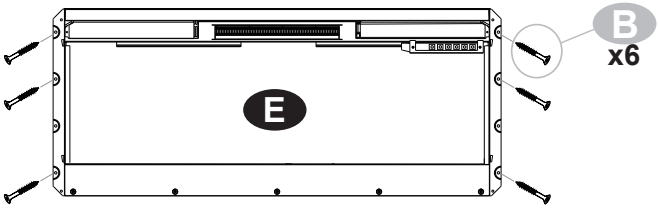

4

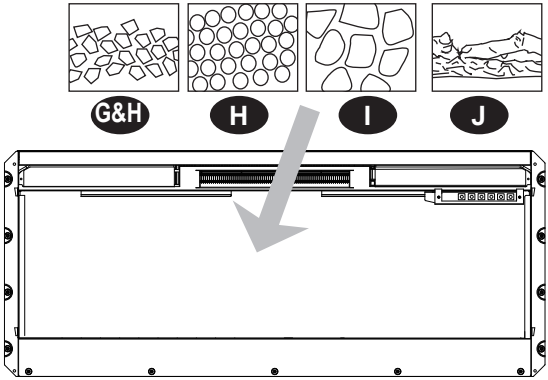

5

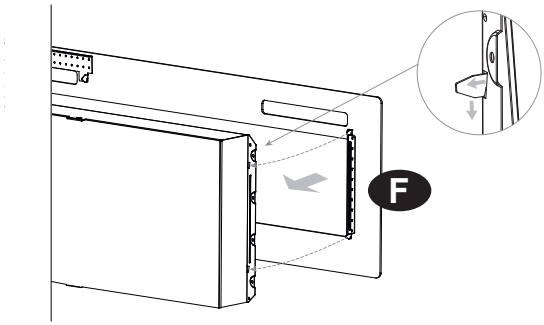

6

Lock glass in place

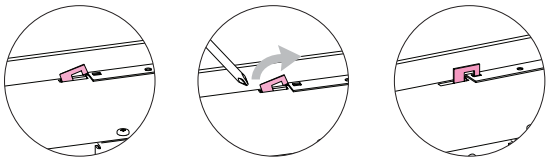

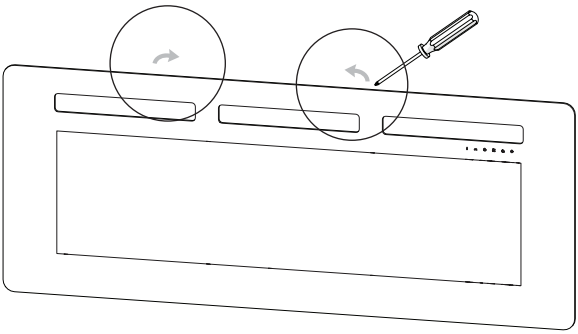

ON-WALL INSTALLATION

1

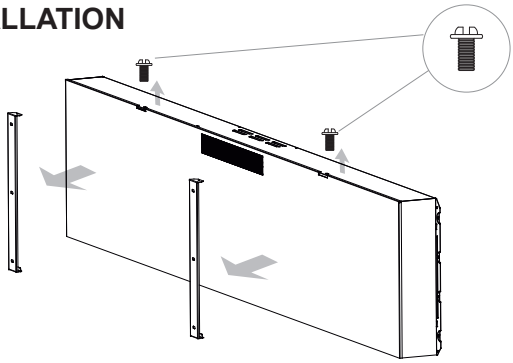

2

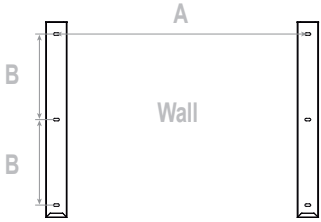

Dimensions - mm

Model	A	B
DVF1200	406	200
DVF1500	813	200
DVF1800	813	200

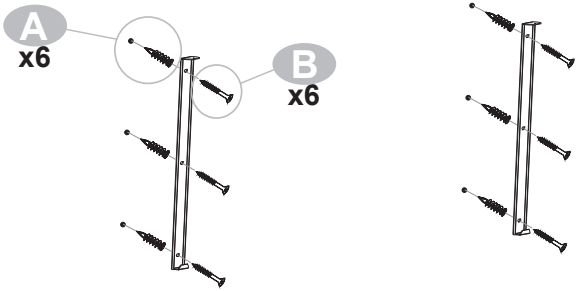

3

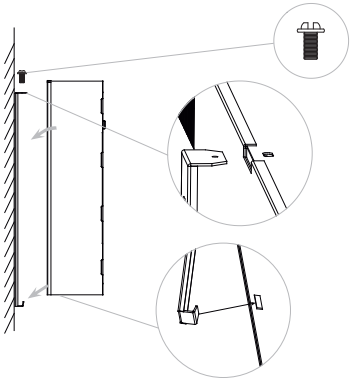

4

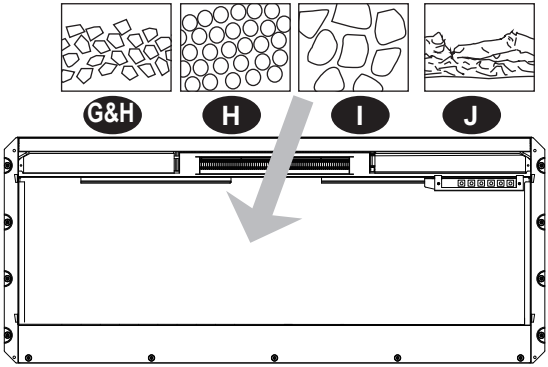

5

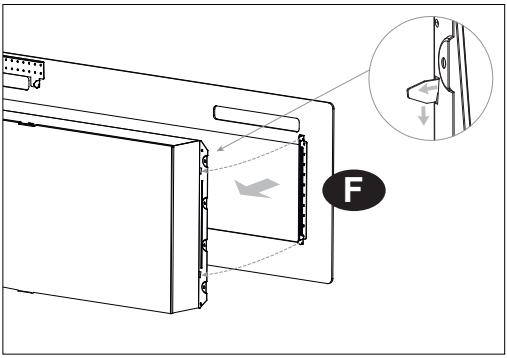

Lock glass in place

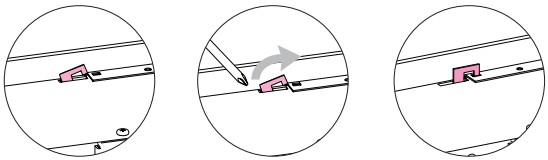

6

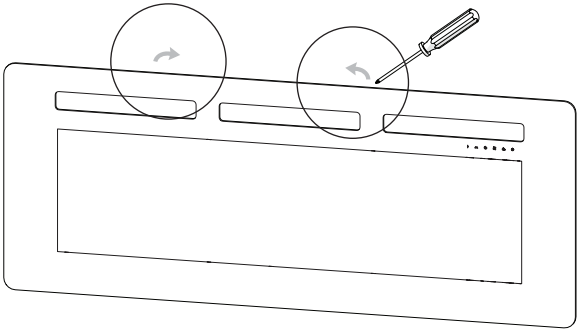

TABLE TOP INSTALLATION

1

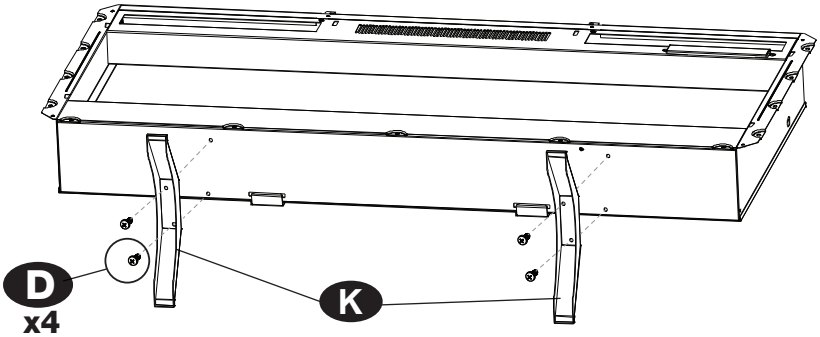

2

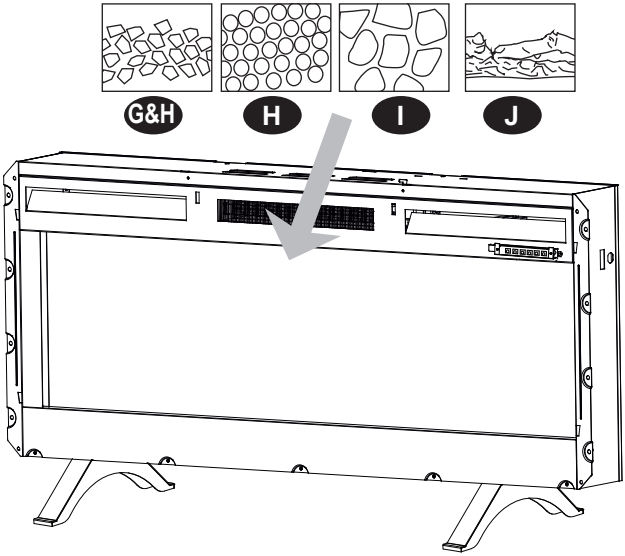

3

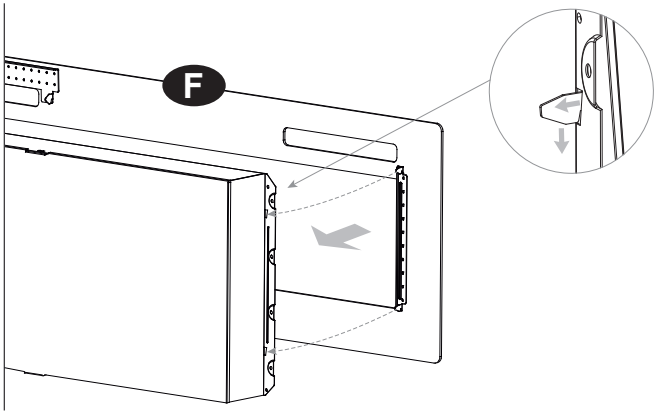

4

Lock glass
in place

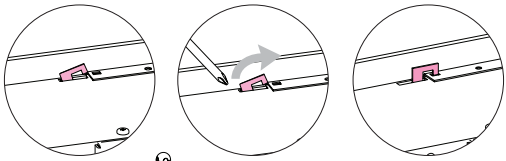

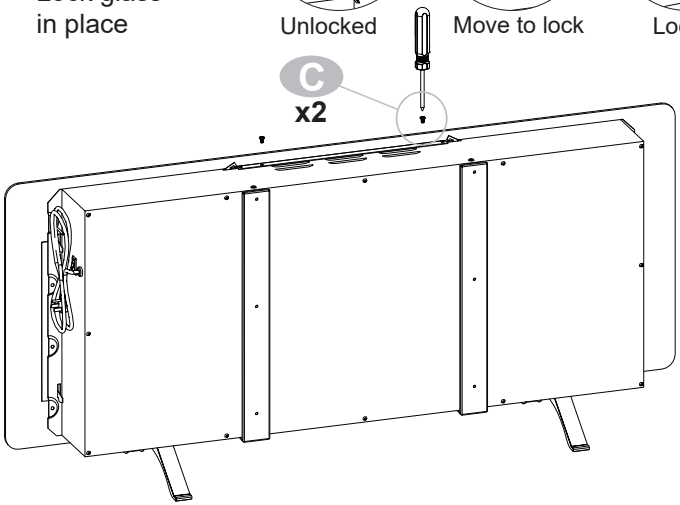

☛ Operation

The fireplace can be operated with the multi–function IR remote control or from the touchscreen controls on the top-right of the front glass.

Once the fireplace is turned on the digital display and the control icons on the front glass will illuminate. If no button or icon is pressed within 10 seconds, the fireplace controls will deactivate by the digital display turning off first and then the icons. To reactivate the controls press any button on the remote or touch any icon on the front glass.

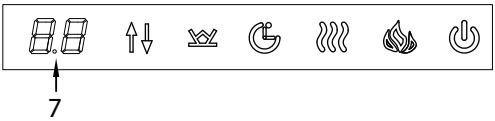

1. Power ON/OFF
2. Flame Control
3. Heat ON/OFF
4. Timer
5. Ember Bed
6. Level Selection
7. Digital Display

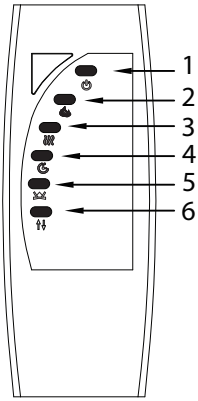

Remote

! **NOTE:** The heater on your fireplace may emit a slight, harmless odour when first used. This odour is a normal condition caused by initial heating of internal heater parts and will not occur again.

CUTOFF SWITCH

! **NOTE:** There is a safety temperature cutoff switch (cutout) inside the heater. If the heater overheats, the cutout will shut off the supply power.

It can be reset by unplugging the unit and waiting 5 minutes before plugging the unit back on.

⚠ **CAUTION**: If you need to continuously reset the heater, unplug the unit and call technical service at 1300 556 816 for Australia and
09 274 8265 for New Zealand.

☛ Operation

POWER ON/OFF

The ON/OFF button turns the fireplace ON and OFF. When the fireplace is OFF, pressing the ON/OFF button on the remote control or touching the icon on the front glass will turn on the fireplace. If the ON/OFF button is pressed again within 10 seconds it will turn OFF the fireplace. With inactive controls, press twice to turn OFF the fireplace. The first press on the ON/OFF button lights up the touchscreen icons and activates the controls.

The fireplace has a built-in memory function. When the fireplace is turned back on, the display will show the last selected function and it will start at the last used settings (except timer). If the fireplace is disconnected from the main power source, it will restart at the default settings.

FLAME CONTROL

This button is used to turn flames ON, to alter the flame color and to turn flames OFF. Press the Flame button multiple times to cycle through 7 solid color options (L8, L7, L6, L5, L4, L3, L2), color rotation option (L1) and flames OFF.

While L8, L7…or L2 is displayed, press the Level Selection button to change the brightness of the flames from the available options: 3- High, 2-Medium and 1-Low.

HEAT ON/OFF

Pressing the Heat control turns the heater on and off.

With Heat ON and set temperature displayed, press the Level Selection button multiple times to cycle through the 11 temperature settings:
ON, 18°C, 19°C, 20°C, 21°C, 22°C, 23°C, 24°C, 25°C, 26°C, 27°C.

‘**ON**’ means the heater operates continuously.

Heater Enable & Disable Function:

From the touchscreen controls touch and hold the Heat icon for 10 seconds. The ember bed will flash 6 times to indicate that the heater function is disabled. When the heat is disabled, pressing the Heat button will cause the ember bed to flash, but the heater will not operate.

To enable the heater again, touch and hold the Heat icon for 10 seconds.

! **NOTE:** This function cannot be set with the remote control.

TIMER CONTROL

The Timer button is used to activate or deactivate the sleep timer.

Pressing the Timer turns the timer on and ‘8h’ appears on the display. Pressing the Timer a second time within 10 seconds will turn the timer off. To set the time, use the Level Selection control to select the desired time from the following: 8h-1h-2h-3h-4h-5h-6h-7h.

The fireplace will shut off after the selected time period. Switching the fireplace OFF with the Power Button will clear any timer setting.

EMBER BED

The Ember Bed button changes the ember bed by cycling through the seven color options: color rotation ‘d1’ and smoldering (fluctuating brightness) embers option ‘d9’. With ‘d8’ through ‘d2’ displayed, the Level Selection button will adjust the brightness of the ember bed from 3- High, 2-Medium, and 1-Low.

LEVEL SELECTION BUTTON

The Level Selection button is used to adjust the heat setting, as well flame and ember bed brightness and timer setting. See relevant section for more details.

Maintenance

- Clean the metal trim using a water-dampened soft, clean cloth. DO NOT use brass polish or household cleaners as these products will damage the metal trim.
- The motors used on the fan and the flame generator assembly are pre-lubricated for extended bearing life and require no further lubrication. However, periodic cleaning/vacuuming of the fan/heater and air intake/output vents is recommended. The heater should be cleaned and inspected regularly, depending on conditions, and at least at yearly intervals.

WARNING: Any electrical repairs of this unit should be carried out by a licensed electrician in accordance with national and local codes.

WARNING: Disconnect power by unplugging the power and allowing heater to cool before attempting any maintenance or cleaning to reduce the risk of fire, electric shock, or injury.

NOTE: When the heater is not in use, the heater should be stored in a dry location, away from possible damage. The power cord should be stored properly to avoid contact with hot or sharp objects.

Remote Control

The battery compartment is located on the back end of the remote control.

1. Press and slide the battery cover open.
2. Insert two 1.5V (AAA) batteries (included) ensuring they are installed correctly with regard to the polarities (+ and -) marked on the inside of the battery compartment.
3. Replace the battery cover.

NOTE: The battery should be removed if the product is to be left unused for a long time.

Replacing the Remote Control Batteries

When replacing the batteries, replace both batteries at the same time with new batteries of the correct type.

- Do not mix old and new batteries.
- Do not mix alkaline, standard (Carbon-Zinc), or rechargeable (Nicad, Nimh, etc) batteries.

Maintenance

Disposal of Used Batteries

Batteries may contain hazardous substances that could be endangering to environment and human health.

- This symbol marked on the battery and/or packaging indicates that used batteries shall not be treated as municipal waste. Instead they shall be left at the appropriate collection point for recycling.
- By ensuring the used batteries are properly disposed of, you will help prevent potential negative consequences for the environment and human health. The recycling of materials will help to conserve natural resources.

For more information about collection and recycling of used batteries, please contact your local municipality, your waste disposal service or the point of sale where you purchased this item.

ENVIRONMENTAL PROTECTION

Discarded electric appliances are recyclable and should not be discarded in the domestic waste! Please actively support us in conserving resources and protecting the environment by returning this appliance to the collection centres.

Troubleshooting

Fault code	Fault Cause	Solution
E1	The heater is overheating	Call technical support.
E2	Thermistor is defective.	Call technical support.
E3	The heater not working.	If the vents are dirty or clogged. Unplug the power, clean the dust and debris of the vent area. Wait for 5 minutes, plug in and turn on the heater. If the heater still don't work, please call technical support.

Warranty

Two Year Limited Warranty

Products to which this limited warranty applies

This limited warranty applies to your newly purchased Dimplex Versa Fireplaces. This limited warranty applies only to purchases made in any State and Territory of Australia and New Zealand. This limited warranty applies to the original purchaser of the product only and is not transferable.

Products excluded from this limited warranty

Light bulbs are not covered by this limited warranty and are the sole responsibility of the owner/purchaser.

What this limited warranty covers and for how long

Products covered by this limited warranty have been tested and inspected prior to shipment and, subject to the provisions of this warranty, Glen Dimplex warrants such products to be free from defects in material and workmanship for a period of 2 years from the date of the first purchase of this product. The limited 2 year warranty period also applies to any implied warranties that may exist under applicable law. Some jurisdictions do not allow limitations on how long an implied warranty lasts, so the above limitation may not apply to the purchaser.

What this limited warranty does not cover

This limited warranty does not apply to products that have been repaired (except by Glen Dimplex or its authorised service representatives) or otherwise altered. This limited warranty does further not apply to defects resulting from misuse, abuse, accident, neglect, incorrect installation, improper maintenance or handling, or operation with an incorrect power source.

What you must do to get service under this limited warranty

Defects must be brought to the attention of Technical Service at 1300 556 816 for Australia and 09 274 8265 for New Zealand. Please have proof of purchase, catalogue/ model and serial numbers available when calling. Limited warranty service requires a proof of purchase of the product.

What Glen Dimplex will do in the event of a defect

In the event a product or part covered by this limited warranty is proven to be defective in material or workmanship during the 2 years limited warranty period you have the following rights:

1) Glen Dimplex will in its sole discretion either repair or replace such defective product or part without charge. If Glen Dimplex is unable to repair or replace such product or part, or if repair or replacement is not commercially practicable or cannot be timely made, Glen Dimplex may, in lieu of repair or replacement, choose to refund the purchase price for such product or part.

2) Limited warranty service will be performed solely by dealers or service agents of Glen Dimplex authorised to provide limited warranty services.

3) The purchaser is responsible for removal and transportation of such product or part (and any repaired or replacement

product or part) to and from the authorised dealer's or service agent's place of business.

4) This limited warranty does not entitle the purchaser to on-site or in-home services. On-site or in-home services may be performed at the purchaser's request and expense at Glen Dimplex's then-current rates for such services.

5) Glen Dimplex will not be responsible for, and the limited warranty services shall not include, any expense incurred for installation or removal of the product or part (or any replacement product or part) or any labour or transportation costs. Such costs shall be the purchaser's responsibility.

What Glen Dimplex and its dealers and service agents are also not responsible for:

IN NO EVENT WILL GLEN DIMPLEX, OR ITS DIRECTORS, OFFICERS, OR AGENTS, BE LIABLE TO THE PURCHASER OR ANY THIRD PARTY, WHETHER IN CONTRACT, IN TORT, OR ON ANY OTHER BASIS, FOR ANY INDIRECT, SPECIAL, PUNITIVE, EXEMPLARY, CONSEQUENTIAL, OR INCIDENTAL LOSS, COST, OR DAMAGE ARISING OUT OF OR IN CONNECTION WITH THE SALE, MAINTENANCE, USE, OR INABILITY TO USE THE PRODUCT, EVEN IF GLEN DIMPLEX OR ITS DIRECTORS, OFFICERS, OR AGENTS HAVE BEEN ADVISED OF THE POSSIBILITY OF SUCH LOSSES, COSTS OR DAMAGES, OR IF SUCH LOSSES, COSTS, OR DAMAGES ARE FORESEEABLE. IN NO EVENT WILL GLEN DIMPLEX, OR ITS OFFICERS, DIRECTORS, OR AGENTS BE LIABLE FOR ANY DIRECT LOSSES, COSTS, OR DAMAGES THAT EXCEED THE PURCHASE PRICE OF THE PRODUCT. SOME JURISDICTIONS DO NOT ALLOW THE EXCLUSION OR LIMITATION OF INCIDENTAL OR CONSEQUENTIAL DAMAGES, SO THE ABOVE LIMITATION OR EXCLUSION MAY NOT APPLY TO THE PURCHASER.

Technical Service

Contact our friendly customer service team for technical and troubleshooting support. Make sure you have your sales receipt, location of purchase, and the model and serial number of your product.

Australia

1300 556 816
www.dimplex.com.au/en-au/support/contact-us
8, Lakeview Drive, Scoresby VIC 3179

New Zealand

09 274 8265
www.dimplex.co.nz/en-nz/support/contact-dimplex
38 Harris Road, East Tamaki, Auckland 2013

In keeping with our policy of continuous product improvement, we reserve the right to make changes without notice.

© 2020 Glen Dimplex

GlenDimplex