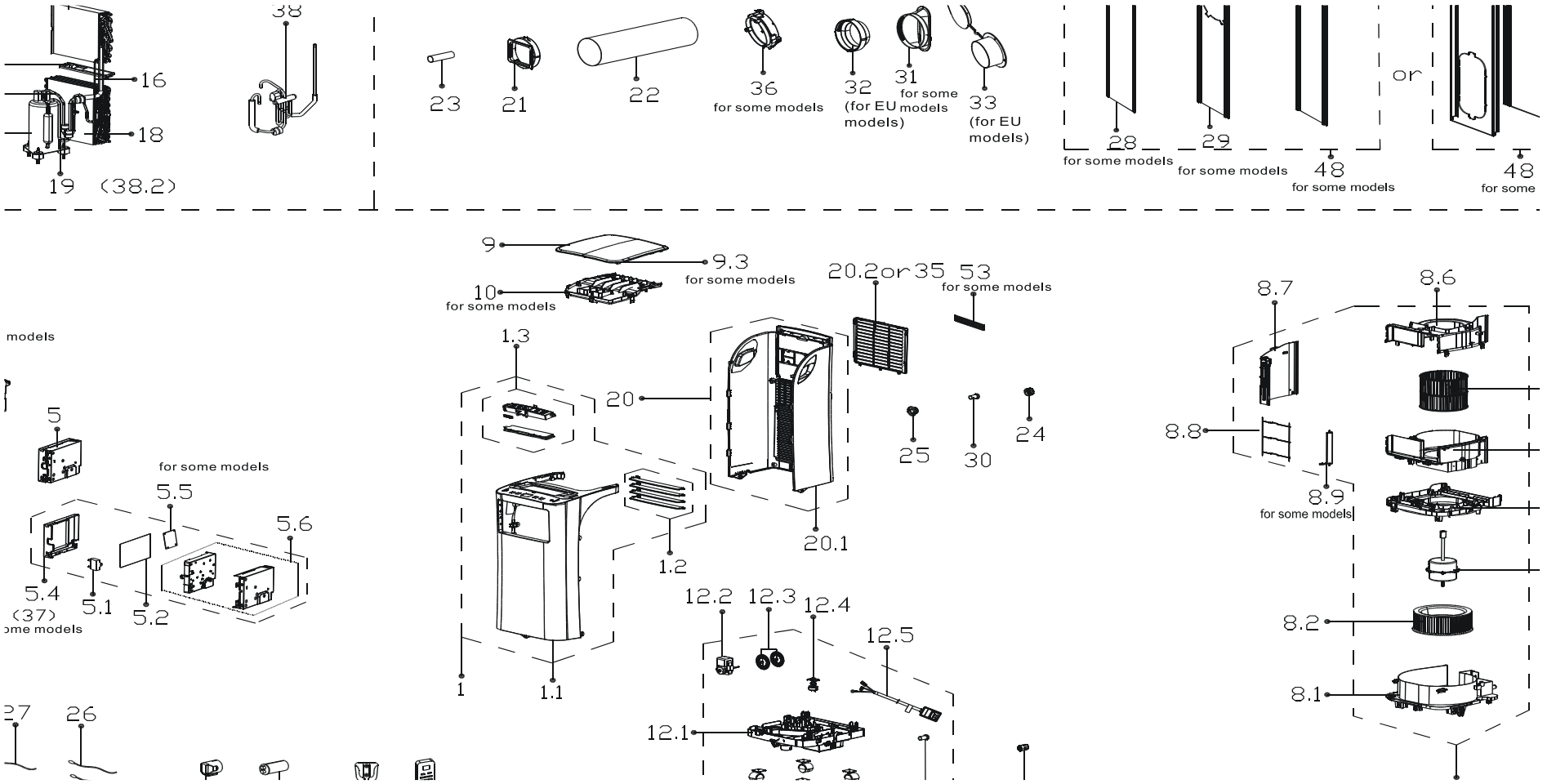
16
18
19
(38.2)
38
23
21
22
36
for some models
32
(for EU models)
31
for some models
33
(for EU models)
28
for some models
29
for some models
48
for some models
or
48
for some
9
9.3
for some models
10
for some models
20.2or35
53
for some models
models
1.3
20
25
30
24
5
for some models
5.5
5.6
5.4
5.1
5.2
(37)
ome models
1.2
20.1
12.2
12.3
12.4
12.5
1
1.1
12.1
27
26
8.7
8.6
8.8
8.9
for some models
8.2
8.1

No.	Part Number	Part Description	Qty
1	12120600A25560	Front panel assembly	1
1.1	12120600A10782	Front panel subassembly	1
1.2	12120600A10779	Connecting rod of louver assembly	1
1.3	17220600001301	Display board subassembly	1
2	17317000A58546	Remote controller	1
4	12120600004423	Cover of electronic control box	1
5	17220600001451	Electronic control box subassembly	1
5.1	17400101000085	Fan motor capacitor	1
5.2	17120600001629	Main control board subassembly	1
5.5	17120100001103	Inverter control board subassembly	1
5.6	12120600004403	Electronic control box subassembly	1
6	12100601000126	Capacitor box	1
7	17400103000020	Capacitor of compressor	1
8	12120600004485	Air outlet volute shell assembly	1
8.1	12120600002920	Air exhaust volute shell subassembly	1
8.2	12100103000025	centrifuge fan	1
8.3	11002012031793	Single phase asynchronous motor	1
8.4	12120600005466	Cover subassembly of air exhause volute shell	1
8.5	12120600000900	Air outlet volute shell	1
8.6	12120600000907	Air outlet volute shell	1
8.7	12120600004744	Sealing board	1
8.8	12220600001022	Outdoor air inlet grille	1
8.9	12120600000236	Louver	1
8.11	12100103000043	centrifuge fan	1
9	12120600005723	inner side upper air duct subassembly	1
11	12220600000079	Supporting bar	2
12	12120600A25300	Chassis assembly	1
12.1	12120600005506	Chassis subassembly	1
12.1.1	12620600000019	Universal wheel	4
12.2	11002017002127	Shaded-pole motor	1
12.3	12120600002923	Water Wheel	1
12.3	12120600000250	Water wheel	1
12.4	17400511000002	Water Level Switch	1
12.5	17401202A00280	Power cord subassembly	1
12.6	12600801000048	Drain stopper	1
13	12120600001499	Cover of Drain connector(outdoor)	1
14	11103010015474	Fixed Speed Rotary Compressor	1
15	15120600002260	Discharge pipe assembly	1

No.	Part Number	Part Description	Qty
16	15120600002257	Capillary assembly	1
17	15820600000813	Evaporator assembly	1
18	15820600000476	Condenser Assembly	1
19	15120600001513	Suction pipe assembly	1
20	12120600A10775	Rear Panel assembly	1
20.1	12120600A10776	Rear panel	1
21	12120600003048	Connector, air exchaust duct	1
22	12120600A12675	Exhaust hose subassembly	1
23	12100509000040	Drain pipe	1
24	12120600001492	Drain connection	1
25	12100510000017	Drain connection	1
26	11201007003441	Pipe Temperature Sensor	1
27	11201007003426	Room temperature sensor	1
29	12120600004204	Window sealing board	1
30	12600801000048	Drain stopper	1
35	12120600A10785	Indoor air inlet grille	1
36	12120600A12674	Connecter, air excaust duct	1
52	12117000002114	Bracket of remote Controller	1