morphy richards®

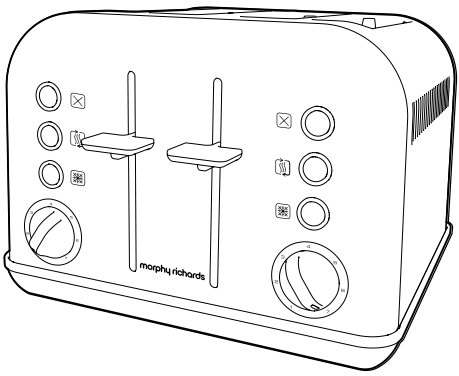

2 and 4 slice Accents toasters with Pause and Check
(certain models only) Please read and keep these instructions

AUS

2year guarantee
2 ans de garantie | 2 años de garantía

www.morphyrichards.com

AUS

- This appliance can be used by children aged from 8 years and above and persons with reduced physical, sensory or mental capabilities or lack of experience or knowledge, if they have been given supervision or instruction concerning use of the appliance in a safe way and understand the hazards involved.
- Children shall not play with the appliance.
- Cleaning and user maintenance shall not be made by children unless they are older than 8 and supervised.
- Keep the appliance and its cord out of reach of children less than 8 years of age.
- This appliance is intended to be used in household and similar applications such as: farm houses; by clients in hotels, motels and other residential type environments; bed and breakfast type environments.

  It is not suitable for use in staff kitchen areas in shops, offices and other working environments.
- **WARNING: The outer surface may get hot when the appliance is operating. Do not touch the top of the appliance or other hot parts during or after use, use the handles or knobs.**
- This appliance is not intended to be operated by means of an external timer or separate remote control system.



CAUTION!
HOT SURFACE

PLEASE BE AWARE OF HOT SURFACES HANDLE WITH CARE

Treating scalds

- Run cold water over the affected area immediately.
- Do not stop to remove clothing.
- Seek medical advice quickly.

Location

- Do not use outdoors or near water.
- Ensure that the appliance is used on a firm, flat, heat resistant surface away from the edge of the work surface.
- Ensure that sufficient space is left above and around all sides of your appliance to allow air to circulate.
- IMPORTANT: The bread may burn, therefore, do not use the toaster near or below curtains, draperies, walls, cupboards and other flammable materials.
- Do not place on or near a hot gas electric burner or in a heated oven.

Personal safety

- **Do watch your appliance during use.**
- **WARNING: Do not insert oversize foods, metal, foil packages or utensils into the toaster.**
- **WARNING: Do not attempt to dislodge food when the appliance is plugged in and never insert cooking utensils into the slots.**
- IMPORTANT: Do not place bread or other items on top of the slots as this may damage the appliance and create a fire hazard.

Other safety considerations

- Do not operate any appliance with a damaged cable or plug or after the appliance malfunctions or has been dropped or damaged in any manner.
- Do not attempt repairs - the appliance contains no user-serviceable parts. Call our helpline for advice.
- Only use for intended purpose.
- Do not move the appliance whilst hot.
- The use of attachments or tools not recommended or sold by Morphy Richards may cause fire, electric shock or injury.

Treating Scalds

- Run cold water over the affected area immediately. Do not stop to remove clothing, get medical help quickly.

Mains cable

- Do not let the cable run across a cooker or hot area, this might damage the cable.
- If the supply cable is damaged, it must be replaced by the manufacturer, it's service agent or similarly qualified persons in order to avoid a hazard.
- The mains cable should reach from the socket to the appliance without straining the connections. Reduce the length of the excess cable by using the cord storage facility.
- Do not let the mains cable hang over the edge of the worktop where a child could reach it.
- Do not let the cable run across an open space e.g. between a low socket and a table.

WARNING: This appliance must be earthed.

Getting the best from your new toaster...

Safety first

Do not touch metal top or sides of the appliance during or after use as they get very hot.

Empty crumb tray(s) regularly

To clean away any crumbs that accumulate after use.

In order to achieve uniform browning

Wait a minimum of 30 seconds between each toasting, so that the control can automatically reset.

ELECTRICAL REQUIREMENTS

Check that the voltage on the rating plate of your appliance corresponds with your house electricity supply which must be A.C. (Alternating Current).

WARNING: This appliance must be earthed.

UK only

If the socket outlets in your home are not suitable for the plug supplied with this appliance the plug should be removed and the appropriate one fitted.

WARNING: The plug removed from the mains lead, if severed, must be destroyed as a plug with a bared flexible cord is hazardous if engaged into a live socket outlet.

Where used, should the fuse in the 13 amp plug require changing, a 13 amp BS1362 fuse must be fitted.

AUS

Features

1. Bread slots
2. Bread carriage lever(s) with high lift feature
3. Frozen button
4. Reheat button
5. Cancel button or Pause and check/Cancel button (Depends upon model)
6. Electronic variable browning control(s)
7. Removable crumb tray(s) at rear
8. Cord storage

Key


Frozen button


Re-heat button


Cancel button
(Depends upon model)


Pause and check/Cancel button
(Depends upon model)

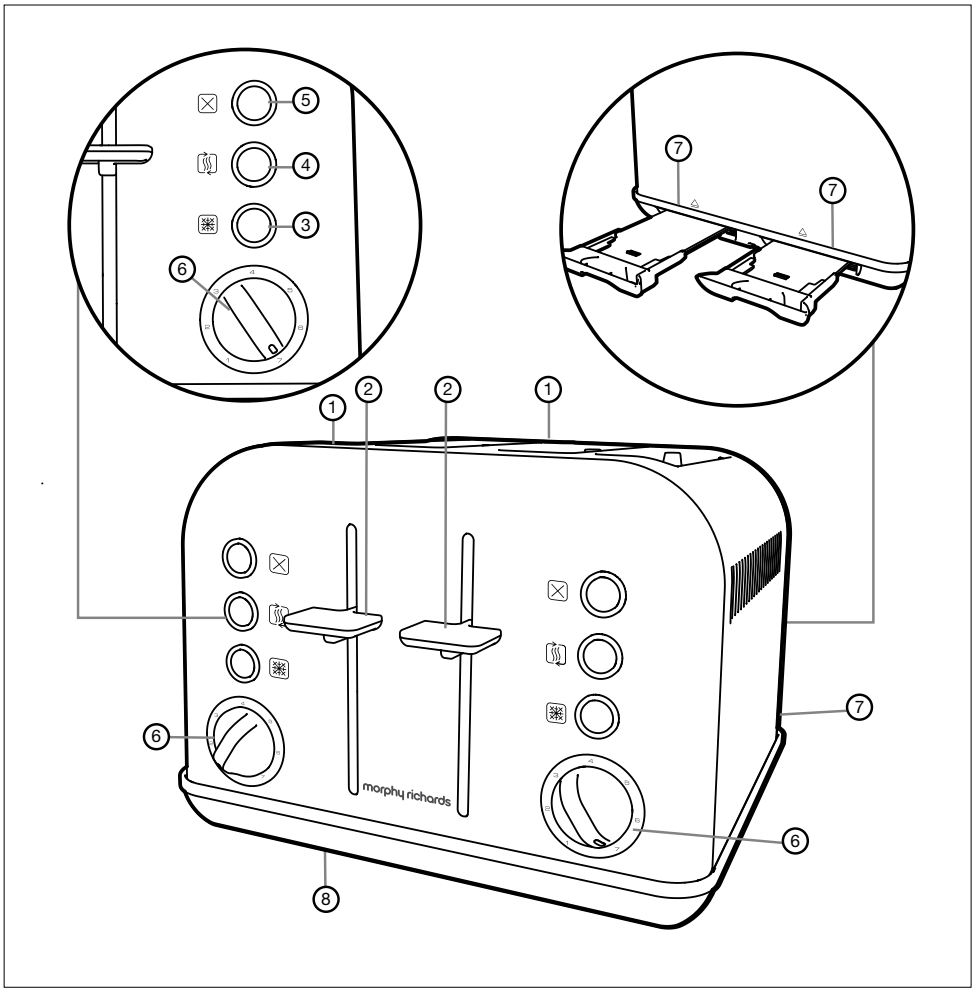
5
4
3
6
7
7
1
2
2
1
6
7
6
8
morphy richards

Before first use

- The bread carriage levers will not stay down unless the toaster is connected to the mains supply.
- Before using the toaster for the first time operate the toaster without bread.
- As with all new electric heating elements, your toaster emits a 'new' smell when it is first switched on. This is quite normal and not a cause for concern.

Operating the appliance

- On the four slice models, the toaster has two sides with controls repeated for each half. Each half can be used together or independently.

1 Select the desired level of browning on the browning control dial ❻.

2 After selecting the desired level, place your bread in the slots ❶ and depress the bread carriage lever downwards until it locks.

3 After the set time has been reached the bread will pop up automatically ready for removal from the slots. The bread carriage lever will have returned to its upper position and the heating element will have switched off.

WARNING: Do not wrap the cable around the main body of the appliance during or after use.

ADDITIONAL FEATURES

Using the re-heat button

If your toast has popped up and gone cold, the toaster offers a re-heat facility. To use, depress the relevant bread carriage lever and press the re-heat button ❹ immediately. The button will illuminate and the toaster will operate for a short period re-heating the bread.

Using the frozen button

To toast frozen bread do not adjust the browning control from your normal setting. Place the bread in the bread slots as normal, and press the frozen button ❸.

Using the cancel button
(Depends upon model)

If you wish to interrupt the toasting process, press the cancel button ❺.

Using the pause and check/cancel button
(Depends upon model)

If you wish to check the process of the toasting cycle, press the Pause and check/cancel button ❺. On pressing the button, the bread carriage will pop up automatically for you to check. This action will pause the heating elements, during this period the function button lights will flash. If you have achieved the desired level of browning remove the toast from the toaster. If longer toasting is required, depress the bread carriage lever within five seconds to resume the toasting cycle at the same stage it was at when it was paused.

Hints and tips

- In order to achieve uniform browning, we recommend you wait a minimum of 30 seconds between each toasting, so that the control can be automatically reset.
- If toasting one slice only, you may need to adjust the browning control to a slightly lower setting.
- Note you will also notice a slight variation in toast colour on one side of a single slice.
- Stale bread toasts more rapidly than fresh bread. Therefore, the browning control should be set at a lower setting than usual.
- All sorts of bread can be used as well as teacakes, small rolls etc. Slices should not however be so thick as to cause burning or jamming within the bread slots.
- If the bread in your toaster becomes jammed disconnect your toaster at the socket, allow it to cool, then remove the bread.
- When toasting 2 or more slices it is recommended they are of equal size and freshness.
- Allow the toaster to cool fully before putting away.

AUS

Cleaning and maintenance

1 After use and before cleaning, switch off at the mains, remove the plug from the wall socket and wait for the toaster to cool.

2 Wipe the outside of the toaster with a damp cloth only and dry with another cloth or tissue.

- NEVER use metal polish or coarse scouring agents and never immerse your appliance in any sort of liquid.
- NEVER use any pointed or sharp articles for cleaning the inside, otherwise the heating element will be damaged.
- NEVER use a brush or push your fingers or metal objects down the slots.

Crumb tray Ⓐ

WARNING: Crumbs will accumulate in the crumb tray(s) and could catch fire if not emptied regularly.

When the appliance has cooled down completely, tap the sides of the case lightly to dislodge any crumbs lodged in the appliance chamber and remove the crumb tray(s) ❼. Empty the tray(s) and replace it.

Never operate the appliance without the crumb tray(s) fitted.

HELPLINE

If you have any difficulty with your appliance, do not hesitate to call us.

We are more likely to be able to help than the store from where you bought it.

Please have the following information ready to enable our staff to deal with your query quickly.

- Name of the product.
- Model number as shown on the underside of the appliance.
- Serial number as shown on underside of the appliance.

THIS SECTION IS ONLY APPLICABLE FOR CUSTOMERS IN UK AND IRELAND

REGISTERING YOUR TWO YEAR GUARANTEE

Your standard one year guarantee is extended for an additional 12 months when you register the product within 28 days of purchase with Morphy Richards. If you do not register the product with Morphy Richards within 28 days, your product is guaranteed for 1 year. To validate your 2 year guarantee register with us online at **www.morphyrichards.co.uk**

N.B. Each qualifying product needs to be registered with Morphy Richards individually. Please refer to the one year guarantee for more information.

YOUR ONE YEAR GUARANTEE

It is important to retain the retailer's receipt as proof of purchase. Staple your receipt to this back cover for future reference. Please quote the following information if the product develops a fault. These numbers can be found on the base of the product.

Model no.
Serial no.

All Morphy Richards products are individually tested before leaving the factory. In the unlikely event of any appliance proving to be faulty within 28 days of purchase, it should be returned to the place of purchase for it to be replaced. If the fault develops after 28 days and within 12 months of original purchase, you should contact the Helpline number quoting Model number and Serial number on the product, or write to Morphy Richards at the address shown. You may be asked to return a copy of proof of purchase. Subject to the exclusions set out below (see Exclusions), the faulty appliance will then be repaired or replaced and dispatched usually within 7 working days of receipt. If, for any reason, this item is replaced during the 1 year guarantee period, the guarantee on the new item will be calculated from original purchase date. Therefore it is vital to retain your original till receipt or invoice to indicate the date of initial purchase. To qualify for the 1 year guarantee, the appliance must have been used according to the instructions supplied. For example, crumb trays should have been emptied regularly.

EXCLUSIONS

Morphy Richards shall not be liable to replace or repair the goods under the terms of the guarantee where:

1 The fault has been caused or is attributable to accidental use, misuse, negligent use or used contrary to the manufacturer's recommendations or where the fault has been caused by power surges or damage caused in transit.

2 The appliance has been used on a voltage supply other than that stamped on the products.

3 Repairs have been attempted by persons other than our service staff (or authorised dealer).

4 The appliance has been used for hire purposes or non domestic use.

5 The appliance is second hand.

6 Morphy Richards are not liable to carry out any type of servicing work, under the guarantee.

7 Plastic filters for all Morphy Richards kettles and coffee makers are not covered by the guarantee.

8 Batteries and damage from leakage are not covered by the guarantee.

9 The filters have not be cleaned and replaced as instructed.

This guarantee does not confer any rights other than those expressly set out above and does not cover any claims for consequential loss or damage. This guarantee is offered as an additional benefit and does not affect your statutory rights as a consumer.

YOUR INTERNATIONAL TWO-YEAR GUARANTEE

This appliance is covered by two-year repair or replacement warranty.

It is important to retain the retailers receipt as proof of purchase. Staple your receipt to this back cover for future reference.

Please quote the following information if the product develops a fault. These numbers can be found on the base of the product.

Model no.
Serial no.

All Morphy Richards products are individually tested before leaving the factory. In the unlikely event of any appliance proving to be faulty within 28 days of purchase it should be returned to the place of purchase for it to be replaced.

If the fault develops after 28 days and within 24 months of original purchase, you should contact your local distributor quoting Model number and Serial number on the product, or write to your local distributor at the addresses shown.

You will be asked to return the product (in secure, adequate packaging) to the address below along with a copy of proof of purchase.

Subject to the exclusions set out below (1-9) the faulty appliance will then be repaired or replaced and dispatched usually within 7 working days of receipt.

If for any reason this item is replaced during the 2-year guarantee period, the guarantee on the new item will be calculated from original purchase date. Therefore it is vital to retain your original till receipt or invoice to indicate the date of initial purchase.

To qualify for the 2-year guarantee the appliance must have been used according to the manufacturers instructions. For example, appliances must have been descaled and filters must have been kept clean as instructed.

The local distributor shall not be liable to replace or repair the goods under the terms of the guarantee where:

1 The fault has been caused or is attributable to accidental use, misuse, negligent use or used contrary to the manufacturers recommendations or where the fault has been caused by power surges or damage caused in transit.

2 The appliance has been used on a voltage supply other than that stamped on the products.

3 Repairs have been attempted by persons other than our service staff (or authorised dealer).

4 Where the appliance has been used for hire purposes or non domestic use.

5 The appliance is second hand.

6 The local distributor are not liable to carry out any type of servicing work, under the guarantee.

7 The guarantee excludes consumables such as bags, filters and glass carafes.

8 Batteries and damage from leakage are not covered by the guarantee.

9 The filters have not be cleaned and replaced as instructed.

This guarantee does not confer any rights other than those expressly set out above and does not cover any claims for consequential loss or damage. This guarantee is offered as an additional benefit and does not affect your statutory rights as a consumer.

AUSTRALIAN WARRANTY

This appliance is guaranteed for 2 years against faulty material, components and workmanship.

This warranty is in addition and does not affect your statutory rights.

Proof of purchase must be produced for any warranty benefit. In the unlikely event of any appliance proving to be faulty, securely pack and return the item to the place of purchase accompanied by the original receipt or invoice.

Our goods come with guarantees that cannot be excluded under the Australian Consumer Law. You are entitled to a replacement or refund for a major failure and for compensation for any other reasonably foreseeable loss or damage. You are also entitled to have the goods repaired or replaced if the goods fail to be of acceptable quality and the failure does not amount to a major failure.

NOT COVERED BY THIS WARRANTY
(Australian only)

- If the appliance has not been used in accordance with the manufacturers' recommendations or Instructions.
- If the fault is deemed to be caused by abuse, misuse, neglect, modifications or in proper use and or care
  Eg: Kettles: Excessive build up of scale.
  Toasters: Excessive build up of crumbs or foreign matter etc.
- Connection to incorrect voltage to that stamped on the product.
- Unauthorised repairs.
- Appliance used other than for domestic purposes.
- Excluding bags, filters, glass, carafes, and cutting blades.
- Freight and insurance costs.

If for any reason this item is replaced during the 2 year guarantee period, the guarantee on the new item will be calculated from original purchase date. Therefore it is vital to retain your original receipt or invoice to indicate the date of original purchase.

Morphy Richards's policy is to continually improve quality design and product quality. The company therefore reserves the right to change any specifications or to carry out modifications as deemed worthy at any time.

The Australian supplier reserves the right to repair, modify, exchange or replace the faulty appliance with the same or similar model or product of equivalent value.

AUS **Glen Dimplex Australia**
Unit 1, 21 Lionel Road, Mount Waverley, Victoria 3149
T: 1300 556 816
E: sales@glendimplex.com.au
www.morphyrichards.com.au

NZ **Glen Dimplex Australasia**
38 Harris Road, East Tamaki, Auckland 2013. New Zealand
T: 9274 8265
E: sales@glendimplex.co.nz

morphy richards

TT242004MAUS Rev 3 10/14

www.morphyrichards.com