EUROMAID

installation & operating instructions and cooking guidance

Built-in Oven

Model MS 8
MW 8

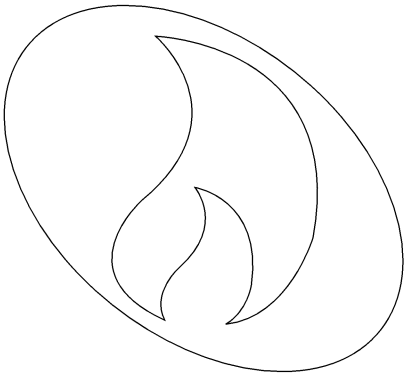

get the best from your new cooker

Please read these instructions before installation or using your appliance!

Dear Customer,

By purchasing this product you have chosen an appliance of advanced technology and high quality.

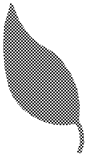

The appliance was produced in modern facilities which meet all environmental standards.

The instructions will help you to operate the appliance quickly and safely.

- Upon delivery, please check that the appliance is not damaged. If you note any transport damage, please contact your point of sale immediately and do not connect and operate the appliance!
- Before you connect and start using the appliance, please read this manual and all enclosed documents. Please note in particular the safety instructions.
- Keep all documents so that you can refer to the information again later on. Please keep your receipt for any repairs which may be required under warranty.
- When you pass on the appliance to another person, please provide all documents with it.

CE

Table of Contents

1 General Information.....4

Overview.....4

Technical Data.....5

Accessories supplied with the unit.....5

2 Safety Instructions.....7

Explanation of safety instructions 7

Basic safety instructions.....7

Safety for children 8

Safety when working with electricity.8

Intended use.....9

Disposal.....9

Packaging material.....9

Old equipment.....9

Future transportation.....9

3 Installation 10

Before installation.....10

Installation and connection.....12

4 Preparation.....14

Tips for saving energy 14

Initial operation 14

Setting the time 14

First cleaning of the appliance 15

Initial heating 15

5 How to Operate the Oven.... 16

General information on baking, roasting and grilling 16

How to use the electric oven 16

Operating modes.....17

How to operate the oven timer.....18

How to use the program lock.....20

Cooking times table.....21

How to operate the grill 23

Cooking times table for grilling.....23

How to use the alarm clock 24

6 Maintenance and Care 25

General information 25

Cleaning the control panel.....25

Cleaning the oven 25

Removal of oven door.....26

Replacing the oven lamp 26

7 Troubleshooting 27

1 General Information

Overview

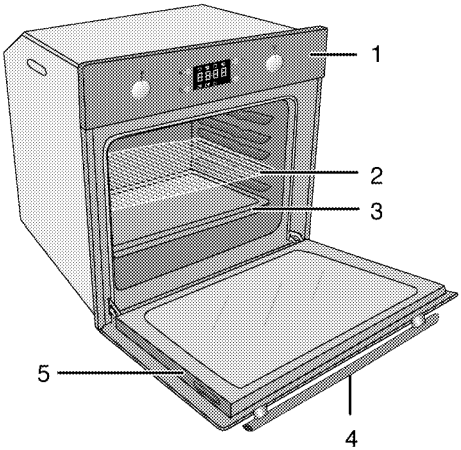

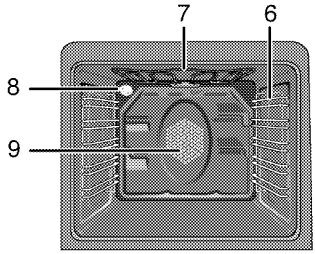

1	Control panel	6	Shelf positions
2	Wire shelf	7	Top heating element
3	Tray	8	Lamp
4	Handle	9	Fan motor (behind steel plate)
5	Door		

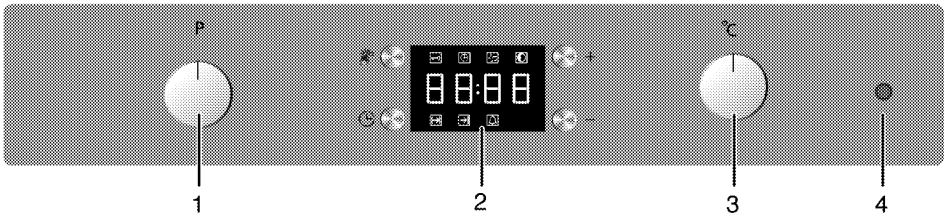

1	Function knob	3	Thermostat knob
2	Digital timer	4	Thermostat lamp

Technical Data

Voltage/frequency	220-240 V ~ 50 Hz
Total electric consumption	2.5 kW
Fuse protection	min. 16 A
Cable type / cross section	H05VV-FG 3 x 1,5 mm^2
Cable length	max. 2 m
Outer dimensions (height/width/depth)	595 mm/594 mm/567 mm
Installation dimensions (height/width/depth)	**590 or 600 mm/560 mm/min. 550 mm
Main oven	**Multifunction oven**
Energy efficiency class#	A
Inside illumination	15/25 W
Grill power consumption	2.2 kW

Basis: In electrical ovens, the data on energy labels are in conformity with EN 50304. Values were determined under standard load and convection/hot air (if available). Heating mode with an energy efficiency rating specified by EN 50304 is determined in accordance with below priority order depending on functions (modes) availability on the product. 1- Eco fan heating, 2-Slow cooking, 3-Fan heating (hot air), 4-Top and bottom heat with convection air, 5-Top and bottom heating.

** See *Installation, page 10*.

Accessories supplied with the unit

Important
Accessories supplied can vary depending on the product model. All the accessories described in the user manual may not exist on your product.

Baking tray

Can be used for pastries, frozen foods and big roasts.

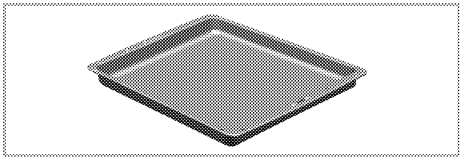

Deep roasting tray

Can be used for pastries, big roasts, foods with liquid content and during grilling as dripping pan.

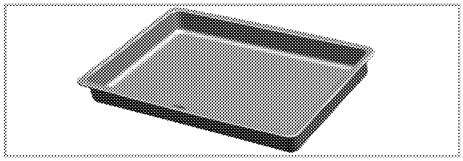

Pastry tray

It is recommended for pastries such as cookies and biscuits.

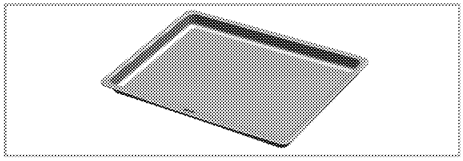

Small baking tray
Can be used for small portions. This baking tray is placed onto the wire shelf.

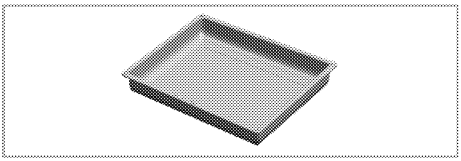

Wire shelf
Can be used for roasting and as deposit for baking, roasting and casserole dishes.

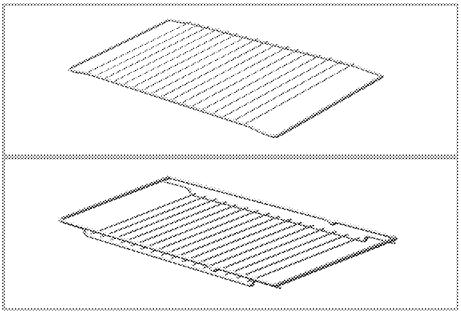

Proper positioning of the wire shelf and tray on sliding shelves
It is important to position the grill and/or dripping pan on the wire shelves correctly. Slide the grill or the dripping pan completely between the 2 rails and make sure it is stable before putting a dish on it (Please see the following figure).

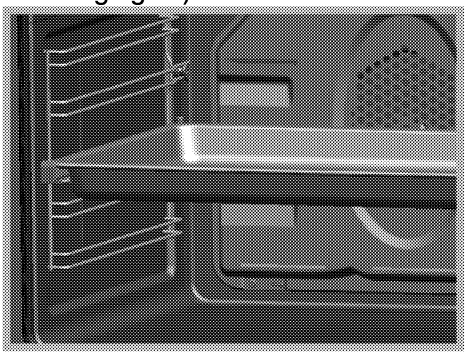

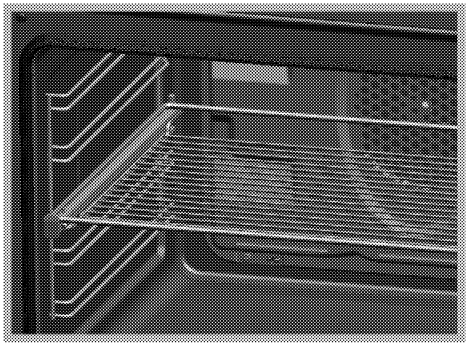

Small wire shelf and fat pan with handle
Can be used for both grilling and fat collection. The fat pan is placed onto the large wire shelf.

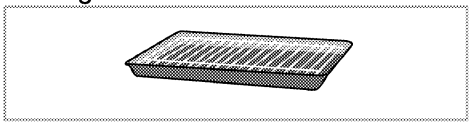

- Apply handle only at the holes in the middle of the fat pan.
- Remove handle for grilling.

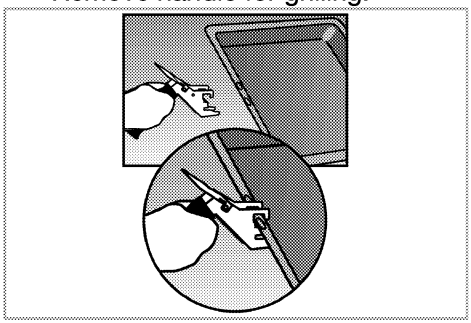

2 Safety Instructions

Explanation of safety instructions

The following types of safety instructions and information are used in this manual. They can be distinguished by the symbol and the initial signal word.

DANGER
High risk of personal injury.
Non-observance may or will cause serious injuries or death.

CAUTION
Risk of personal injury.
Non-observance may or will cause minor or medium injuries.

NOTICE
Risk of material damage.
Non-observance may or will cause damage on the appliance or other objects.

Important
Tip for the user.
Useful information on how to use the appliance. No injury risk information.

Basic safety instructions

- The manufacturer reserves its right to make changes in the technical specifications in order to improve the appliance quality without any prior notice. Figures included in this manual are for schematic purpose only and may not match exactly with your appliance. Values stated on the markings of the appliance or in other printed documents supplied with the appliance are obtained under laboratory conditions as per relevant standards. These values may vary according to the usage of the appliance and ambient conditions.
- This appliance is not intended for use by persons (including children) with reduced physical, sensory or mental capabilities, or lack of experience and knowledge, unless they have been given supervision or instruction concerning use of appliance by a person responsible for their safety.

  Children should be supervised to ensure that they do not play with the appliance.
- An additional protective means to avoid contact with the oven door is available. This part should be fitted when young children are likely to be present.
- Never use when judgement or coordination is impaired by the use of alcohol and/or drugs.
- Do not operate the appliance if it is defective or shows any visible damage.
- Do not carry out any repairs or modifications on the appliance. However, you may remedy some malfunctions; see *Troubleshooting, page 27*.

- Be careful when using alcoholic drinks in your dishes. Alcohol evaporates in high temperatures and may cause fire since it will catch fire when it gets in contact with hot surfaces.
- Do not heat closed food containers and glass jars. Pressure that may build-up in the jar can cause it to burst.
- Ensure that no flammable materials are adjacent to the appliance as the sides become hot during use.
- Do not place baking trays, dishes or aluminium foil directly onto the bottom of the oven. The heat accumulation might damage the bottom of the oven.
  Don't place dishes, pans, trays directly on the oven compartment base.
  Keep all ventilation slots clear of obstructions.
- Appliance may be hot when it is in use. Never touch the hot burners, inner sections of the oven, heating elements etc. Keep children away!
- Always use heat-resistant gloves when putting or removing the dishes into/from your oven.
- Don't use the cooker with front door glass removed.
- Rear surface of the oven gets hot when it is in use. Gas / Electric connection should not touch the rear surface, otherwise the mains cable may get damaged. Do not trap the mains cable between the hot oven door and frame. Do not route the mains cable over the hot cooking section. Otherwise, cable insulation may melt and cause fire as a result of short circuit.
- Check all controls on the appliance are switched off after use.

Important
For the warranty to be valid, the appliance must be installed by a qualified person in accordance with current regulations.

Safety for children

- Accessible parts of the appliance will become hot whilst the appliance is in use and until the appliance has cooled, children should be kept away.
- Accessible parts may be hot when the grill is in use. Young children should be kept away.
- The packaging materials will be dangerous for children. Keep the packaging materials away from children. Please dispose of all parts of the packaging according to environmental standards.
- When the door is open, do **not** load any heavy object on it and do **not** allow children to sit on it. It may overturn or door hinges may get damaged.

Safety when working with electricity

- Any work on electric equipment and systems may only be carried out by authorized qualified persons.
- Even if the oven is off, the cooling fan continues working for a while after turning off the oven.
- In case of any damage, switch off the appliance and disconnect it from the mains supply by

removing the fuse or switching off the circuit breaker.

- Ensure that the fuse rating is correct.

Intended use

The appliance is designed for domestic use only. Commercial use is not admissible.
This appliance should not be used for warming the plates under the grill, hanging towels and dish cloths etc. on the handles, drying and the heating purposes.
The manufacturer shall not be liable for any damage caused by improper use or handling errors.

Disposal

Packaging material

DANGER
Risk of suffocation by the packaging materials!
Keep children away from the packaging materials.

The packaging material and transport locks are made from materials that are not harmful to the environment. Please dispose of all parts of the packaging according to environmental standards. This is beneficial to the environment.

Old equipment

This appliance bears the selective sorting symbol for waste electrical and electronic equipment (WEEE). This means that this appliance must be handled pursuant to European Directive 2002/96/EC in order to be recycled or dismantled to minimize its impact on the environment. For further information, please contact your local or regional authorities.
Electronic appliances not included in the selective sorting process are potentially dangerous for the environment and human health due to the presence of hazardous substances.

Future transportation

NOTICE
Do not place other items on the top of the appliance. The appliance must be transported upright.

Store the appliance's original box and transport the appliance in its original carton. Follow the guidance marks that are printed on the carton.

Important
Verify the general appearance of your equipment by identifying possible damage during the transportation.

To prevent the wire shelf and tray inside the oven from damaging the oven door, place a strip of cardboard onto the inside of the oven door that lines up with the position of the trays. Tape the oven door to the side walls.
If you do not have the original carton
Pack the appliance in bubble wrap or thick cardboard and tape it securely in order to prevent damage during transportation.

3 Installation

Before installation

A safety distance must be left between the appliance and the kitchen walls and furniture. See figure (values in mm). The appliance is intended for installation in commercially available kitchen cabinets. A safety distance must be left between the appliance and the kitchen walls and furniture. See figure (values in mm).

- Surfaces, synthetic laminates and adhesives used must be heat resistant (100 °C minimum).
- Kitchen cabinets must be set level and fixed.
- If there is a drawer beneath the oven, a shelf must be installed between oven and drawer.

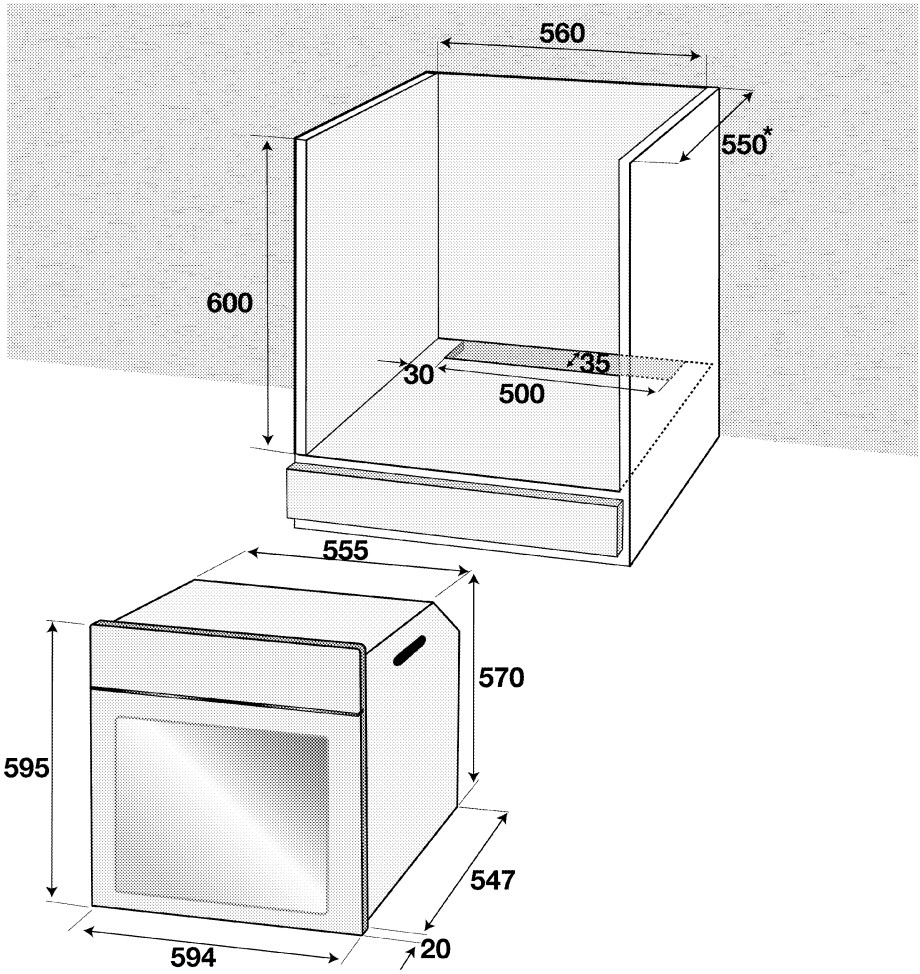

* min.

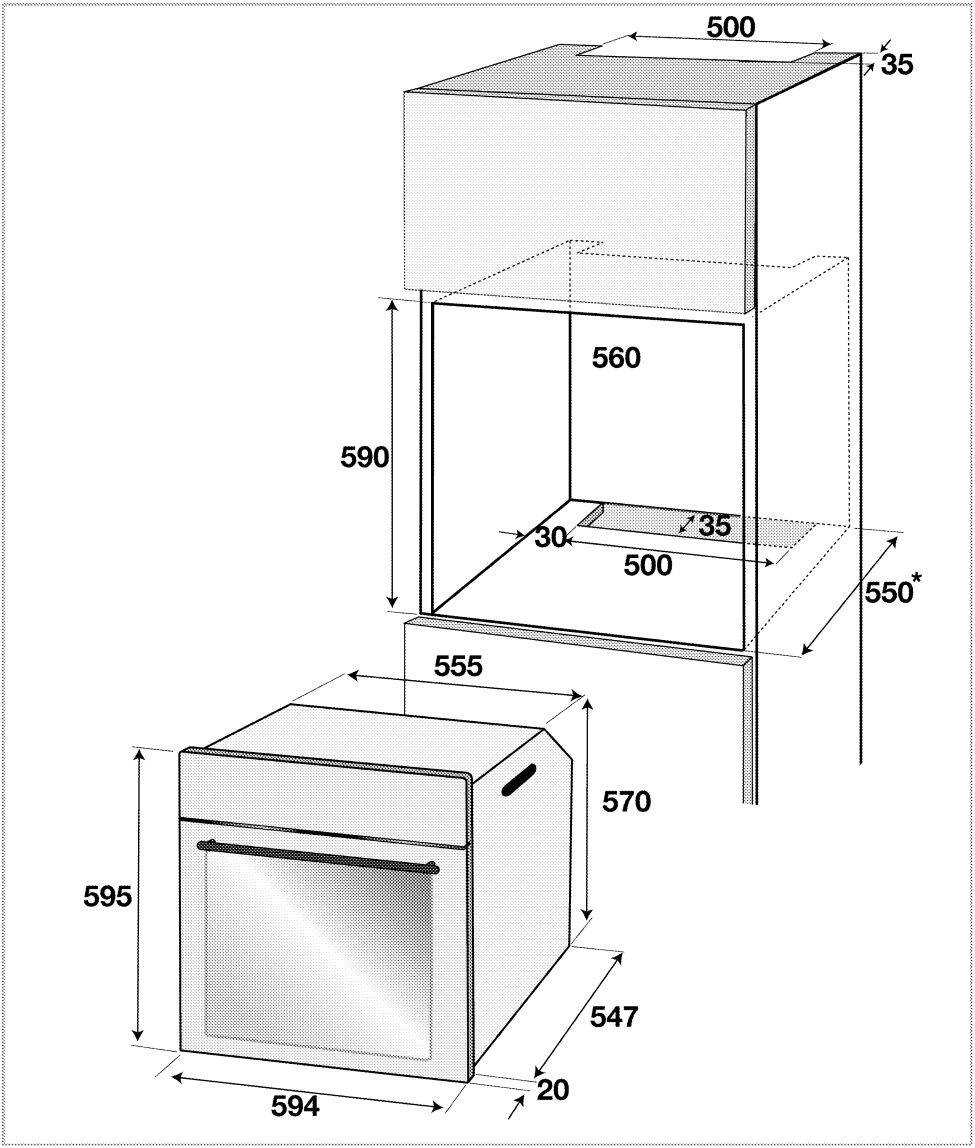

* min.

Installation and connection

NOTICE
Material damage!
The door and/or handle must not be used for lifting or moving the appliance.

- For installation the appliance must be connected in accordance with all local gas and/or electrical regulations.
- Carry the appliance with at least two persons.
- Use the slots or wire handles located at both sides to move the appliance.

NOTICE
If the appliance has wire handles, push the handles back into the side walls after moving the appliance.

Connection to the mains supply

Important
This appliance must be earthed!
Our company shall not held responsible for any damage caused by using the appliance without an earthed socket.

DANGER
Risk of electric shock, short circuit or fire by unprofessional installation!
The appliance may be connected to the mains supply only by an authorized qualified person and the appliance is only guaranteed after correct installation.

DANGER
Risk of electric shock, short circuit or fire by damage of the mains lead!
The mains lead must not be clamped, bent or trapped or come into contact with hot parts of the appliance.
If the mains lead is damaged, it must be replaced by a qualified electrician.

- The mains supply must correspond to the data specified on the rating plate of the appliance. The rating plate can be seen when the front door is opened.
- The appliance mains cable must correspond to the specifications and the power consumption; see *Technical Data, page 5*.

DANGER
Risk of electric shock!
Before starting any work on the electrical installation, please disconnect the appliance from the mains supply.

1. A mains lead is not provided together with appliance. It must connect a mains lead to your appliance that you would select from the table (*Technical Data, page 5*) on basis of the installation at your home, following the instructions in the wiring diagram.

If no all-pole separation from the mains supply is possible, a separation unit must be connected with a contact distance of 3 mm min. (fuses, line safety switches, contactors) all poles which should be adjacent to (but not above) the cooker in accordance with IEE regulation. Failure to observe this instruction may result in operational

problems and invalidation of the appliance warranty.
Additional protection by a residual current circuit breaker is recommended.

2. Open the terminal block cover with screwdriver.
3. Pass the mains lead through the cable clamp under the terminal and fix the mains lead to main body with supplied screw via cable tightener.
4. Connect the cables according to the supplied diagram.

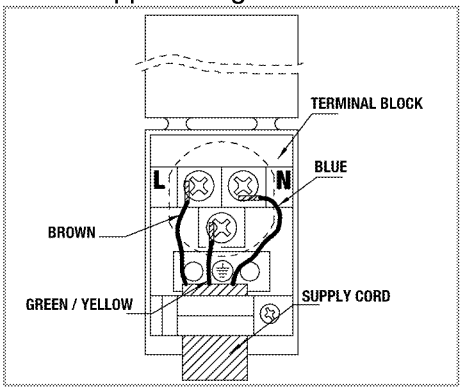

5. Close the cover of the terminal block once the wiring is complete.

NOTICE
Mains cable must not be longer than 2 meters for safety reasons.

6. The mains lead should be routed away from the appliance and not be trapped between the appliance and the wall.

Installation

1. Slide the oven through the cabinet aperture, align and secure.

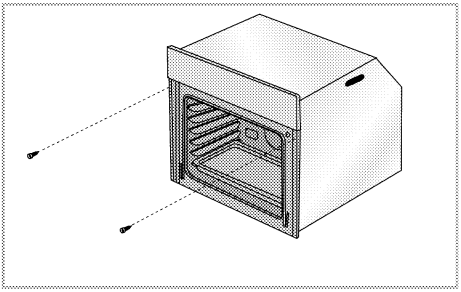

Fix your oven with the 2 screws and washers as indicated in the figure.

Final check

1. Connect the appliance to the mains supply and switch on the mains supply.
2. Check function.

For equipment with a cooling fan

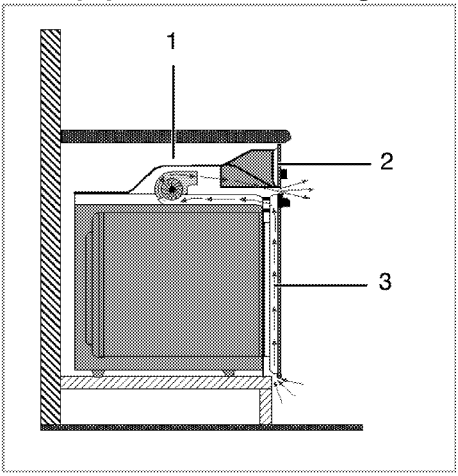

1 Fan
2 Control panel
3 Door

The Built-in cooling fan cools both the built-in cabinet and the front of the appliance.

NOTICE
Cooling fan continues to run for up to 20-30 minutes (approx.) even after the oven is turned off.

4 Preparation

Tips for saving energy

The following tips will help you to use your appliance in an ecological way and to save energy:

- Use dark coloured and enamel coated trays, since the heat transmission will be better.
- While cooking your meals, perform a preheating operation if it is advised in the user manual or cooking instructions.
- During cooking, do not open the oven door frequently.
- Try to cook more than one type of meal within the oven at the same time (You can cook two different meals at the same time by locating cooking bowls on the same shelf). It will be suitable to cook more than one meal after each other. The oven will already be hot.
- Defrost frozen meals before cooking them.
- You can save energy by switching off your oven a few minutes before the end of the cooking time (The oven door should not be opened).

Initial operation

Before first usage of your appliance, don't forget to remove the sticker on the digital timer screen.

Setting the time

Important
Before using the oven the clock time must be set. If the clock time is not set, the oven will not work.

NOTICE
While making any adjustment, related symbols on the clock will flash.

After switching on the oven for the first time, adjust the current time with keys 5 and 6.

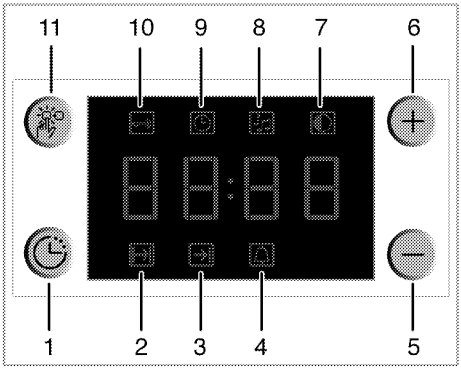

1 Program knob
2 Cooking time
3 Cooking end time
4 Alarm period
5 Minus key
6 Plus key
7 Screen brightness adjustment
8 Alarm volume
9 Current time
10 Keylock
11 Adjustment key

After setting the time, you can start and end the cooking by selecting the desired position with temperature button and function button.

Important
If the current time is not set, time setting will start increasing/moving up from *12:00*. Clock icon '9' will be displayed to indicate that the current time has not been set. This icon will disappear once the time is set.

Important
Current time settings are cancelled in case of power failure and will need to be set again.

Changing the time of the day

In order to change a preset time of the day in your oven;

1. Press key **11** to activate current time icon '9'.
2. Adjust hour of the day using keys **5** and **6**.

Changing screen brightness adjustment

1. Press key **11** to activate screen brightness symbol '7' for screen brightness adjustment.
2. Adjust the desired brightness using keys **5** and **6**.

» Selected brightness level will be displayed as **d-01**, **d-02** or **d-03** on the screen.

First cleaning of the appliance

NOTICE
The surface might get damaged by some detergents or cleaning materials.
Do not use aggressive detergents, cleaning powder/cream or any sharp objects.

1. Remove all packaging materials.
2. Wipe the surfaces of the appliance with a damp cloth or sponge and dry with a cloth.

Initial heating

WARNING
Hot surfaces may cause burns!
Do not touch the hot surfaces of the appliance. Use oven gloves. Keep children away from the appliance.

Important
Smell and smoke may emit during first heating. Ensure that the room is well ventilated.

Any production residues or conservation layers must be burnt off before the first use. Heat up the appliance for about 30 minutes and then switch it off.

Electric oven

1. Take all baking trays and racks from the oven.
2. Close oven door.
3. Select top and bottom heat with the function knob.
4. Select the highest temperature with the thermostat knob; see *How to use the electric oven, page 16*.
5. Heat approximately 30 minutes.
6. Switch off oven; see *How to use the electric oven, page 16*

Grill oven

1. Take all baking trays and wire shelf from the oven.
2. Close oven door.
3. Select highest power of the grill; see *How to operate the grill, page 23*.
4. Heat approximately 30 minutes.
5. Switch off grill; see *How to operate the grill, page 23*

5 How to Operate the Oven

General information on baking, roasting and grilling

DANGER
Risk of scalding by hot steam!
Take care when opening the oven door as steam may escape.

Tips for baking

- Use non-stick coated appropriate metal plates or aluminum containers or heat-resistant silicone moulds.
- Make best use of the space on the rack.
- It is recommended to place the baking mould in the middle of the rack.
- Select the correct shelf position before turning the oven or grill on - don't move oven shelves when hot.
- Keep the oven door closed.

Tips for roasting

- Seasoning with lemon juice and black pepper will improve the cooking performance when cooking a whole chicken, turkey or a large piece of meat.
- Meat with bones takes about 15 to 30 minutes longer before it is cooked than a roast of the same size without bones.
- You should calculate about 4 to 5 minutes cooking time per centimeter height of the meat.
- Let meat rest in the oven for about 10 minutes after the cooking time. The juice is better distributed all over the roast and does not run out when the meat is cut.
- Fish in a fire-resistant dish should be placed on the rack at the medium or lower level.

Tips for grilling

Grilling is ideal for cooking meat, fish and poultry and will achieve a nice brown sur-face without it drying out to much. Flat pieces, meat skewers and sausages are particularly suited for grilling as are vege-tables with a high water content such as tomatoes and onions.

- Distribute the pieces to be grilled on the wire shelf.
- If the grilling is on the wire shelf, locate a dripping pan under it in order to collect the fat.
- Add some water in dripping pan for easy cleaning.

How to use the electric oven

Important
Before using the oven the clock time must be set. If the clock time is not set, the oven will not work.

Select temperature and operating mode

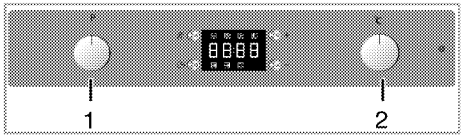

1 Function knob
2 Thermostat knob

The operating modes of the electric oven are selected with the function knob. The temperature is adjusted with the thermostat knob.
All oven functions are turned off by turning the relevant knob to off (upper) position.

All knobs of your oven are of the pop-out type.

1. Make your adjustment once you have pressed the knob in and it pops out.

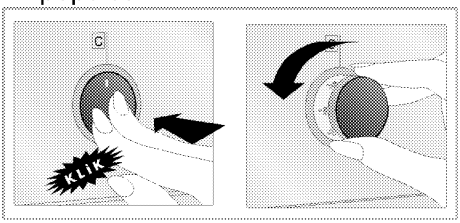

» To reset, push in the knob upon completion of your adjustment.

1. Set thermostat knob to the desired temperature.
2. Set function knob to the required operating mode.

» The oven heats up to the adjusted temperature and maintains it. During heating, temperature lamp stays on.

Switch off electric oven

Turn function knob and thermostat knob to off position (top).

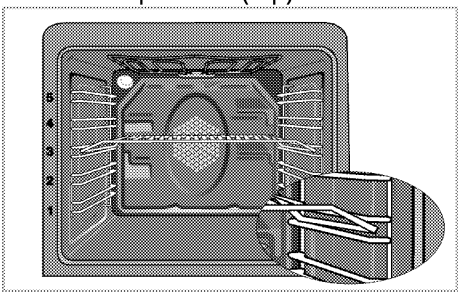

Shelf positions

It is important to position the wire grill on wire shelf correctly. The wire grill must be placed so that it will fit into the opening of the wire shelf as illustrated in the figure.

Operating modes

The order of operating modes shown here might deviate from the arrangement on your appliance.

Top and bottom heat

Top and bottom heat are on. The foodstuffs are heated simultaneously from the upper and lower part. Suitable e.g. for cakes, cookies or cakes and casseroles in baking moulds. Cook with one tray only.

Bottom heat

Only bottom heat is on. Is particularly suitable for dishes, such as pizza, which are required to be baked from bottom.

Top and bottom heat with convection air

Top and bottom heat plus fan (in the rear wall) are on. The hot air is distributed evenly and quickly all over the oven by the fan. Cook with one tray only.

Operating with fan

The oven is not heated. Only the fan (in the rear wall) is in operation. Frozen granular food is thawed slowly at room temperature and cooked food is cooled down.

Hot air

The heating ring with fan (in the rear wall) is in operation. The hot air is distributed evenly and quickly all over the oven by the fan. In most cases, preheating is not required. Suitable when several levels are used for the preparation of food. Suitable for cooking with multi trays.

"3D" function

Top heat, bottom heat plus ring heat with fan (in the rear wall) are on. The appliance to be cooked is evenly and quickly cooked all around. Cook with one tray only.

Surface grill

The large grill (under the oven roof) is in operation. Suitable for grilling larger quantities.

- Put big or medium-sized portions in correct shelf position under the grill heater for grilling.
- Set the temperature to maximum level.
- Turn the food after half of the grilling time.

Grill with convection air

The grill effect is not as strong as with normal grilling.

- Put small or medium-sized portions in correct shelf position under the grill heater for grilling.
- Set the temperature to maximum level.
- Turn the food after half of the grilling time.

How to operate the oven timer

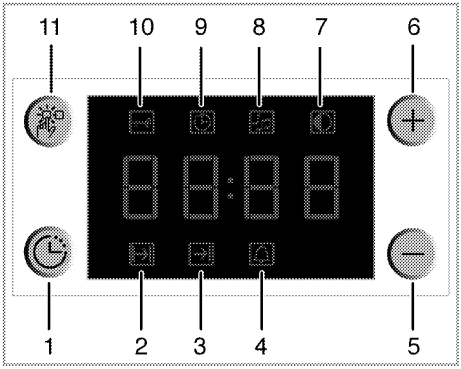

1 Program knob
2 Cooking time
3 Cooking end time
4 Alarm period
5 Minus key
6 Plus key
7 Screen brightness adjustment
8 Alarm volume
9 Current time
10 Keylock
11 Adjustment key

Important

The maximum time to be set for the end of the cooking process is 23 hours and 59 minutes. In case of power cut, program will be canceled. Reprogram is needed.

NOTICE

While making any adjustment, related symbols on the clock will flash. You must wait for a short time for the settings to take effect.

Important

If semi-automatic or full automatic operation mode is set on the clock, time of the day cannot be adjusted.

NOTICE

Cooking time will be displayed once the cooking starts.

Switch on fully automatic operation

In this operation mode you may adjust how long the oven will automatically operate (cooking time) and the time it will be automatically turned off (end of cooking time).

1. Press **1** key to activate cooking time symbol (**2**).
2. Adjust the cooking time using **5** and **6** keys.

» Cooking symbol will be on (will be displayed continuously) after cooking time is set.

3. For the cooking end time, press **1** key to activate cooking end time symbol **'3'**.
4. Adjust cooking end time using **5** and **6** keys.

» Once the cooking end time is set, cooking end symbol and cooking symbol will be lit (displayed continuously). The end of cooking time symbol **(3)** will disappear as soon as the cooking has started.

5. Place your dish in the oven.
6. Select operation mode and temperature.

» Oven timer automatically calculates the startup time for cooking by using the end of cooking time you have set and the cooking period. Selected operation mode is activated when the startup time of cooking has come and the oven is heated up to the set temperature. It maintains this temperature until the end of the cooking time.

7. After the cooking process is completed, **"End"** symbol will be displayed and the alarm signal will sound.
8. Alarm signal will be on for 2 minutes. To stop the alarm signal, just press any key.

Important

If you mute the alarm by pressing any key, the oven will restart operating.
If you press any button at the end of the alarm period, the oven will restart operating.

» Alarm will be silenced and current time will be displayed.

9. **Do not forget** to turn off the oven using temperature knob and function knob.

Switch on semi-automatic operation

In this operation mode, you may adjust the time period during which the oven will operate (cooking time).

1. Press **1** key to activate cooking time symbol **'2'**.

2. Adjust the cooking time using **5** and **6** keys.

» Cooking symbol shall be on (will be displayed continuously) after cooking time is set.

3. Place your dish in the oven.
4. Select operation mode and temperature.

» The oven will be heated up to the preset temperature and will maintain this temperature until the end of the cooking time you selected.

5. After the cooking process is completed, **"End"** symbol will be displayed and the alarm signal will sound.
6. Alarm signal will be on for 2 minutes. To stop the alarm signal, just press any key.

Important

If you mute the alarm by pressing any key, the oven will restart operating.
If you press any button at the end of the alarm period, the oven will restart operating.

» Alarm will be silenced and current time will be displayed.

7. Do not forget to turn off the oven using temperature knob and function knob.

How to use the program lock

Activate the program lock

You can prevent using of clock buttons by activating the program feature.

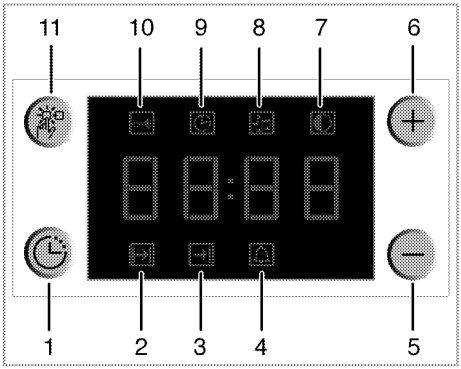

1 Program knob
2 Cooking time
3 Cooking end time
4 Alarm period
5 Minus key
6 Plus key
7 Screen brightness adjustment
8 Alarm volume
9 Current time
10 Keylock
11 Adjustment key

NOTICE

When the keylock function is activated, clock buttons except for **"11"** key cannot be used.

1. Press **'11'** key to activate keylock symbol **"10"**.

» **"OFF"** will be displayed.

2. Press **6** key to activate the keylock.

» After the keylock has been adjusted, **"ON"** will be displayed and the keylock symbol will stay on.

Deactivate the program lock

1. Press **'11'** key to activate keylock symbol **"10"**.

» **"ON"** will be displayed.

2. Press **'5'** key to deactivate the keylock.

» **"OFF"** will be displayed after the keylock is turned off.

Cooking times table

Important

The values indicated in the table below are data indicative. They may vary according to the type of food as well as your preferences of cooking.

Baking and roasting

Important

Level 1 is the **bottom** level in the oven.

Food	Cooking level number		Rack position	Temperature (°C)	Cooking time (min.) (approx.)
Cake in tray	One level		3	175	25 ... 30
Cake in mould	One level		2	180	40 ... 50
Cakes in paper	One level		3	175	25 ... 30
	2 levels		1 - 5	175	30 ... 40
	3 levels		1 - 3 - 5	180	45 ... 55
Sponge cake	One level		3	200	5 ... 10
	2 levels		1 - 5	175	20 ... 30
Cookies	One level		3	175	25 ... 30
	2 levels		1 - 5	170 ... 190	30 ... 40
	3 levels		1 - 3 - 5	175	35 ... 45
Dough pastry	One level		2	200	30 ... 40
	2 levels		1 - 5	200	45 ... 55
	3 levels		1 - 3 - 5	200	55 ... 65
Filled savory pastry	One level		2	200	25 ... 35
	2 levels		1 - 5	200	35 ... 45
	3 levels		1 - 3 - 5	190	45 ... 55
Leaven	One level		2	200	35 ... 45
	2 levels		1 - 3	190	35 ... 45
Lasagna	One level		2 - 3	200	30 ... 40
Pizza	One level		2	200 ... 220	15 ... 20
Lamb haunch (casserole)	One level		3	25 min. 250 after 190	70 ... 90
Roast chicken	One level		2	15 min. 250 after 180 ... 190	55 ... 65

Food	Cooking level number		Rack position	Temperature (°C)	Cooking time (min.) (approx.)
	One level		2	15 min. 250 after 180 ... 190	55 ... 65
Turkey (5.5 kg)	One level		1	25 min. 250 after 180 ... 190	150 ... 210
	One level		1	25 min. 250 after 180 ... 190	150 ... 210
Fish	One level		3	200	20 ... 30
	One level		3	200	20 ... 30
While cooking with 2 trays at the same time, place the deep tray to the upper shelf and shallow tray to the lower shelf. It is suggested to perform preheating for all foods.					

(**) For preheating, set the required temperature, the thermostat lamp will go out when the required temperature is reached.

Tips for baking cakes

1. If pastry is too dry,

» Increase the temperature by 10°C and reduce the cooking time.

2. If pastry dropped,

» Use less liquid or lower the temperature by 10°C.

3. If pastry is too dark on top,

» Place it on a lower rack, lower temperature, and increase the cooking time.

4. If cooked well on the inside but sticky on the outside,

» Use less liquid, lower the temperature, and increase the cooking time.

Tips for baking pastry

1. If the pastry is too dry,

» Increase the temperature some 10°C and decrease the cooking time.

» Dampen the layers of dough with a sauce composed of milk, oil, egg and yoghurt.

2. If the pastry takes too long to bake,

» Pay care that the thickness of the pastry you have prepared does not exceed the depth of the tray and remain level with it.

3. If the upper side of the pastry gets browned, but the lower part is not cooked,

» Make sure that the amount of sauce you have used for the pastry is not too much at the bottom of the pastry. Try to scatter the sauce equally between and on the dough layers for an even browning.

» Cook the pastry in accordance with the mode and temperature given in the cooking table. If the bottom part is still not browned enough, place it on one-layer-lower shelf next time.

Tips for cooking vegetables

1. If the vegetable dish runs out of juice and gets to dry,

» Since using a lid during cooking will keep the juice of the dish in the pan,

cook your vegetable dishes in a pan with a lid instead of a tray.

2. If a vegetable dish does not get cooked,

» Boil the vegetables beforehand or prepare them like canned food and put in the oven.

How to operate the grill

Important

Before using the oven the clock time must be set. If the clock time is not set, the oven will not work.

WARNING

Hot surfaces may cause burns! Close oven door during grilling.

Switch on grill

1. Set the function knob onto the grill symbol.
2. Set grill temperature.
3. Preheat for approximately 5 minutes, if it is necessary.

» The thermostat lamp is switched on.

Switch off grill

1. Turn grill control knob to off position (top).

Shelf positions

For optimum grill coverage, position the wire shelf towards the front of the oven just out of contact with the glass door. Placing the wire shelf fully to the rear of the oven will reduce the grill coverage.

Cooking times table for grilling

Grilling with electric grill

Food	Insertion level	Grilling time (approx.)
Fish	4...5	20...25 min. #
Sliced chicken	4...5	25...35 min.
Lamb chops	4...5	20...25 min.
Roast beef	4...5	25...30 min. #
Veal chops	4...5	25...30 min. #
Toast bread	4	1...2 min.
# depending on thickness		

How to use the alarm clock

In addition to using the timer for cooking, it can be also used as a reminder or an alarm clock.

As soon as the defined period of time has expired, the alarm clock will emit a signal. The alarm clock has no influence on the functions of the oven.

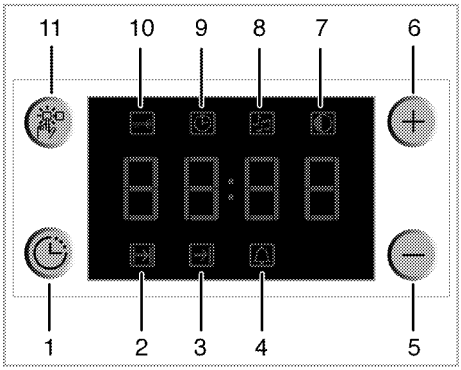

1 Program knob
2 Cooking time
3 Cooking end time
4 Alarm period
5 Minus key
6 Plus key
7 Screen brightness adjustment
8 Alarm volume
9 Current time
10 Keylock
11 Adjustment key

Setting the alarm clock

1. Press **1** key to activate alarm time symbol (**4**).

Important
The maximum alarm time can be 23 hours and 59 minutes.

2. Adjust the alarm time using **5** and **6** keys.

» Alarm symbol will be on (will be displayed continuously) after alarm time is set, and the alarm time will be displayed.

3. After the alarm time is finished, alarm symbol will start flashing and an alarm signal is heard.

Switching off the alarm

1. To stop the alarm signal, just press any key.

» Alarm will be silenced and current time will be displayed.

In order to cancel set alarm time;

1. To reset the alarm time, press **1** key to activate alarm time symbol **(4)**.
2. Press and hold the key **5** until **"0.00"** is displayed.

Important
Alarm time will be displayed. If the alarm time and cooking time are set concurrently, shortest time will be displayed.

Changing alarm sound adjustment

1. Press **'11'** key to activate alarm sound adjustment symbol **(8)** for alarm volume adjustment.
2. Adjust the desired sound using **'5'** and **'6'** keys.

» Selected alarm sound level will be displayed as **"b-01"**, **"b-02"** or **"b-03"** on the screen.

6 Maintenance and Care

General information

DANGER
Risk of electric shock!
Switch off the electricity before cleaning appliance to avoid an electric shock.

DANGER
Hot surfaces may cause burns!
Allow the appliance to cool down before you clean it.

NOTICE
The surface might get damaged by some detergents or cleaning materials.
Do not use aggressive detergents, cleaning powder/cream or any sharp objects.

Clean the appliance thoroughly after each use; in this way it will be possible to remove cooking residues more easily, thus avoiding these from burning the next time the appliance is used.
No special cleaning agents are required for cleaning the appliance. It is recommended to use warm water with washing liquid, a soft cloth or sponge and use a dry cloth for drying.
Do not use any abrasive cleaning materials!

Important
Do not use steam cleaners for cleaning.

Cleaning the control panel

NOTICE
Damage of the control panel!
Do not remove the control knobs for control panel cleaning.

Clean control panel and control knobs.

Cleaning the oven

No oven cleaner or any other special cleaning agent is required for cleaning the oven. It is recommended to wipe the oven with a damp cloth while it is still warm.
To clean the side wall,

1. Remove the front section of the side rack by pulling it in the opposite direction of the side wall.
2. Remove the side rack completely by pulling it towards you.

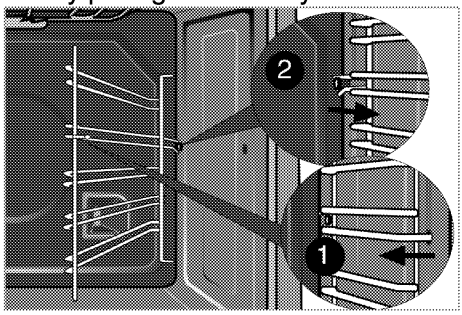

Catalytic walls
Side walls or just back wall of oven interior may be covered with catalytic enamel.
The catalytic walls of the oven must not be cleaned. The porous surface of the walls is self-cleaning by absorbing and converting spitting fat (steam and carbon dioxide).
Clean oven door
Don't use any harsh abrasive cleaners or sharp metal scrapers for cleaning

the oven door. They could scratch the surface and destroy the glass.

Removal of oven door

1. Open the front door.
2. Open the clips at the hinge housing on the right and left hand sides of the front door by pressing them down as illustrated in the figure.

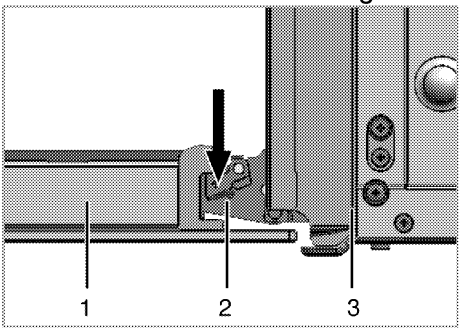

1 Front door
2 Hinge
3 Oven

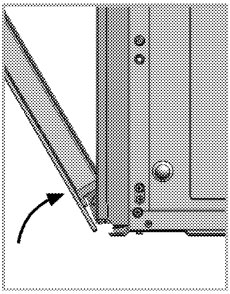

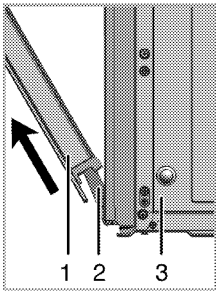

3. Move the front door to half-way.
4. Remove the front door by pulling it upwards to release it from the right and left hinges.

NOTICE
Steps carried out during removing process should be performed in reverse order (steps 4, 3, 2 and 1) to reattach the door. Do not forget to close the clips at the hinge housing when reinstalling the door.

Replacing the oven lamp

DANGER
Hot surfaces may cause burns!
Make sure that the appliance is switched off and cooled down in order to avoid the risk of an electrical shock.

The oven lamp is a special heat-resisting (T 300 °C) electric light bulb; see *Technical Data, page 5*. Oven lamps can be obtained from a good local electrical store.

NOTICE
Position of lamp might vary from diagram.

1. Switch off the appliance at the mains.
2. Unscrew glass cover by turning anti-clockwise.

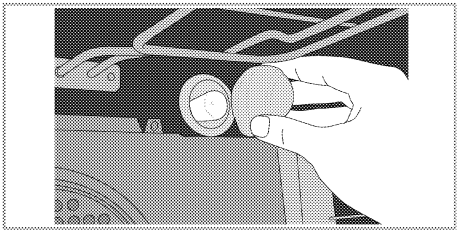

3. Unscrew oven lamp by turning anti-clockwise and replace it with new one.
4. Refit the glass cover.

7 Troubleshooting

DANGER
Risk of electric shock, short circuit or fire by unprofessional repairs!
Repairs on the appliance must be carried out by an approved service centre.

Normal operating conditions

- Smoke and smell may emit for a couple of hours during the first operation.
- It is normal that steam escapes during operation.
- When the metal parts are heated, they may expand and cause noise.

Before you call the service, please check the following points.

Electrical equipment

Malfunction/problem	Possible cause	Advice/remedy
The appliance does not work.	The mains fuse is defective or has tripped.	Check fuses in the fuse box. If necessary, replace or reset them.
	Timer buttons do not work.	Keylock may be enabled. Please disable it(See; *How to use the program lock, page 20*).
Oven light does not work	Oven lamp is defective.	Replace oven lamp.
	No current.	Check fuses in the fuse box. If necessary, replace or reset them.
Oven does not heat.	Function knob and/thermostat knob are not set.	Set function knob and thermostat knob.
	If the appliance has a timer, the timer may not be set.	Set the time.
	No power.	Check mains supply and fuse box.

Clock/ timer (If the appliance has a digital timer)

Malfunction/problem	Possible cause	Advice/remedy
Clock display is blinking or clock symbol is on.	Power was interrupted previously.	Set time Then switch the oven off with function knobs, set the oven function again.

If the problem has not been solved:

1. Separate unit from the mains supply (deactivate or unscrew fuse).
2. Call the after-sales service of your store reseller.

Important
Do not attempt to repair the appliance yourself. There are no customer service items inside the appliance.

ELECTRICAL DISTRIBUTORS AUSTRALIA PTY LTD

ABN 11 051 297 557
SUITE 8/92A MONAVALE ROAD (Enter of Daydream street) WARRIEWOOD NSW 2102
PH:02 9999 2124 FAX: 02 9999 1684
EMAIL:EDAAUST@bigpond.com web site www.euromaid.com.au

285.4408.47/R.AA/25.02.2010

EUROMAID COOKER WARRANTY

IN ADDITIONS TO RIGHTS BY LAW

Electrical Distributors Australia Pty Ltd guarantees to the original purchaser subject to model type either 12 months or Two Years of ownership that any part with defective material be replaced free of charge, provided that all service work is carried out by Electrical distributors Australia Pty Ltd or the nearest appointed service agent.

2 Year Warranty Products:
All built in appliances such as Ovens, Gas and Electric Cook tops.

1 Year Warranty Products:
All Free Standing Gas and Electric products including bench top and portable products.

Portable products ie MC110T are to be returned to the nearest service agent by the purchaser these products offer no in home warranty repair.

Where the appliance is installed outside the normal service area of Electrical Distributors Australia Pty Ltd or its Appointed Service Agent the purchaser will pay the travel cost charges for the service agent to attend the repair or to take the appliance to the service centre.

Built In & Free Standing Appliances:
Access must be granted within normal working hours and our Service Agents must have easy access to these built in appliances and charges will be the responsibility of the purchaser where the service technician cannot obtain easy access to remove the appliance for inspection prior to repair.

This Warranty is not transferable and excludes any repair or replacement caused by Power Surges faulty installation abuse, Pest Damages, misuse, acts of God or accident.
The above Warranty is for Domestic Application only and is limited to Three (3) Months in Commercial Applications.

FOR SERVICE OUTSIDE THE ABOVE AREAS PLEASE CONTACT HEAD SYDNEY OFFICE PH: 02 9999 2124

AUTHORISED SERVICE AGENTS:

NSW
ALL GENERAL WHITEGOODS
4/11 HALLSTROM PLACE
WETHERILL PARK 2164 NSW
PH: 02 97561511
FAX: 02 97561091

VIC
ALL STOVE SERVICE
73 HAVERSHAM AVE
WHEELER HILLS VIC 3150
PH: 1800631348
MOBILE: 0418367468

WESTERN AUSTRALIA
DACAP UNIT
4/57 KENT STREET
CANNINGTON WA 6107
PH: 08 9358 6033 FAX: 08 9358 6044
PERTH

QUEENSLAND
ENDEAVOUR REFRIGERATION
167 ROBERTSON STREET
FORTITUDE VALLEY QLD 4006
PH: 07 3137 3633
FAX: 07 3137 3663

GOLD COAST
ROSHAD APPLIANCE SERVICE
1/13 LEDA DRIVE
BURLEIGH QLD 4220
PH: 0755357044
FAX:0755357407

TASMANIA
FARR ELECTRICAL
286 MAC QUARIE STREET
SOUTH HOBART TAS 7004
PH: 03 6223 1010
FAX: 03 6223 7039

SOUTH AUSTRALIA
PRESTIEGE APPLIANCE REPAIRS CENTRE
4/65 STEPHENS AVENUE
TORRENSVILLE SOUTH AUSTRALIA 5031
PH: 08 83522022
FAX: 08 83522044